Pump type:
20A(C)...X671HDJD

BULGARIA, 6100 Kazanlak,
31, Makariopolski str.,
Tel.:: (+359 431) 622-22, 655-89
Fax: (+359 431) 622-23,
e-mail: shipka54@mbox.contact.bg
www.shipka54.com

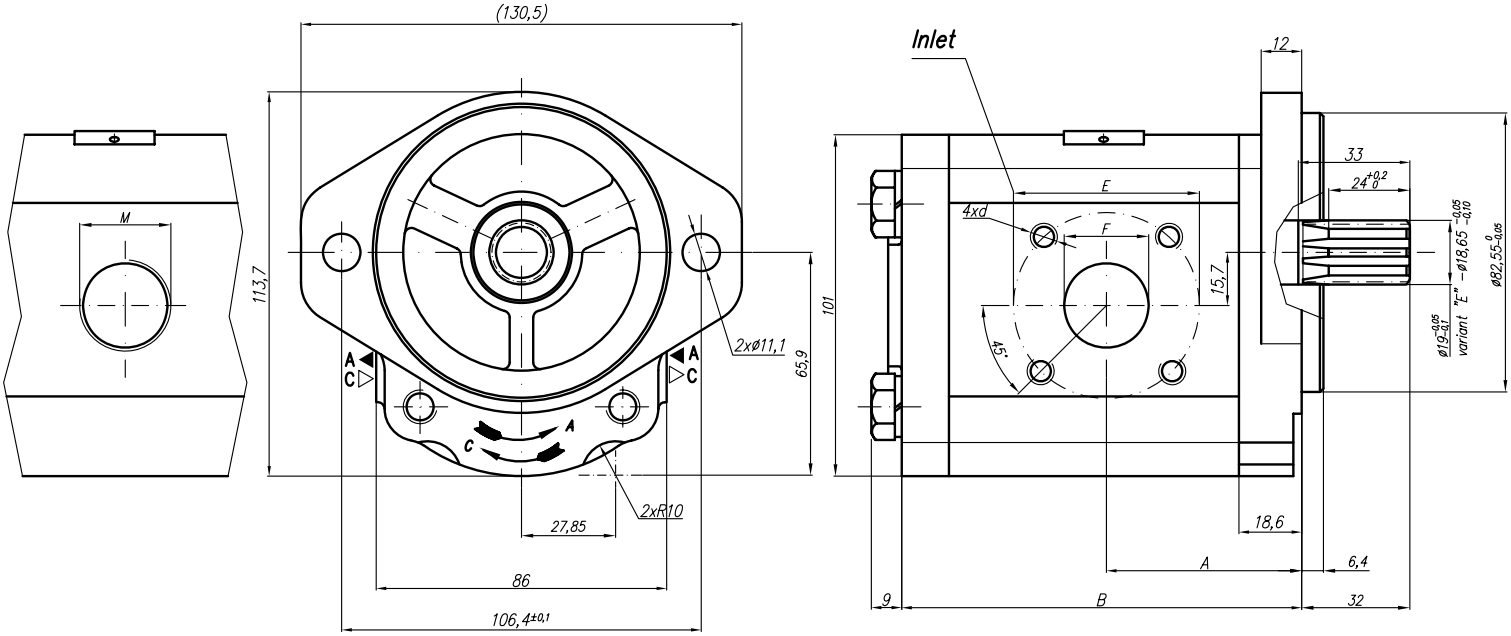

Outlet
ISO 6149-1

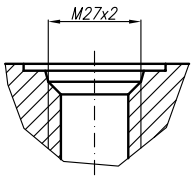

Type	Displacement	Flow		Pressure	max Speed	Dimension							
		at 1500 rpm	at max rpm	P_{nom}	n	A	B	Inlet			Outlet		
	cm^3/rev	l/min	l/min	bar	rpm	mm	mm	E	F	d	M	G	U
20A(C)14X671HDJD	14							55		M8-6H	M27x2		
20A(C)15X671HDJD	15	21,60	43,20	250	3000								
20A(C)16X671HDJD	16	23,04	46,08	250	3000				25				
20A(C)17,3X671HDJD	17,3	24,91	49,82	230	3000								
20A(C)18,2X671HDJD	18,2	26,21	52,42	210	3000								
20A(C)19X671HDJD	19	27,36	54,72	200	3000								
20A(C)22X671HDJD	22	31,68	52,80	180	2500	57,8	118,4						
20A(C)25X671HDJD	25	36,00	60,00	160	2500								
20A(C)28X671HDJD	28	40,32	67,20	130	2500								
20A(C)32X671HDJD	32	46,08	61,44	120	2000								
20A(C)36X671HDJD	36	51,84	69,12	100	2000								