Pump type:
20A(C)...X538S

BULGARIA, 6100 Kazanlak,
31, Makariopolski str.,
Tel.:: (+359 431) 622-22, 655-89
Fax: (+359 431) 622-23,
e-mail: shipka54@mbox.contact.bg
www.shipka54.com

Designed as a II section of tandem pump 22A(C)...X539S/...X538S.

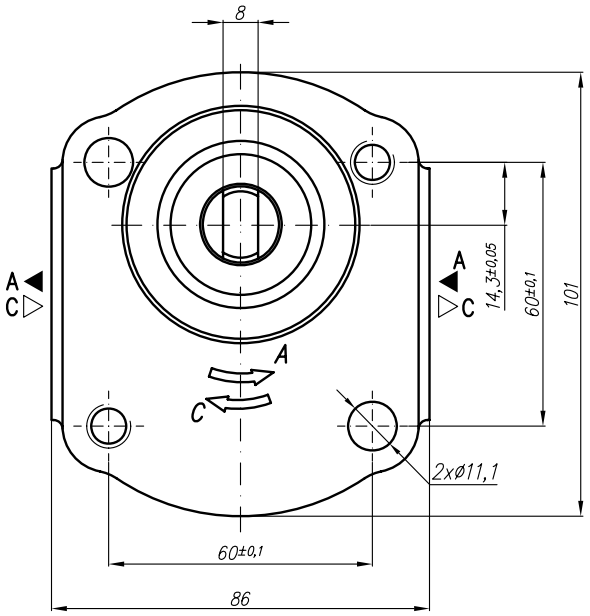

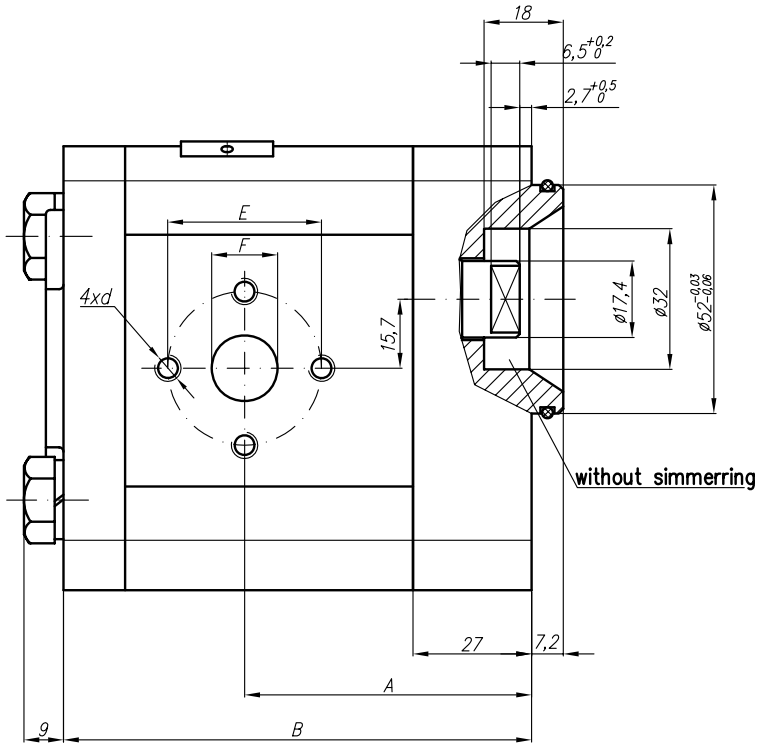

Symbol

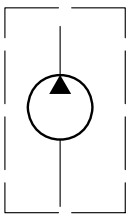

Type	Displacement	Flow		Pressure	max Speed	Dimension							
		at 1500 rpm	at max rpm	P_{nom}	n	A	B	Inlet			Outlet		
	cm^3/rev	l/min	l/min	bar	rpm	mm	mm	E	F	d	E	F	d
20A(C)4,5X538S	4,5	6,14	14,33	200	3500						30,2		1/4"-20UNC
20A(C)6,3X538S	6,3	8,69	20,29	200	3500								
20A(C)8,2X538S	8,2	11,32	26,40	200	3500								
20A(C)10X538S	10	13,95	32,55	200	3500			39,7	19	5/16"-18UNC		14,2	
20A(C)11X538S	11,3	15,76	36,78	200	3500								
20A(C)12X538S	12	16,92	39,48	200	3500								
20A(C)14X538S	14	19,95	46,55	200	3500								
20A(C)15X538S	15	21,60	36,00	200	2500								
20A(C)16X538S	16	23,04	38,40	200	2500	65,3	106,5						
20A(C)19X538S	19	27,36	45,60	200	2500								
20A(C)22X538S	22	31,68	42,24	180	2000								
20A(C)25X538S	25	36,00	48,00	160	2000								