OVERCENTERVALVESWITHBRAKECONTROL

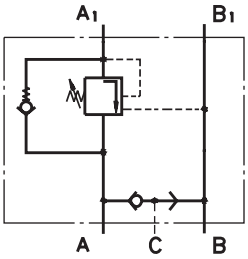

SingleOvercenterValves
withBrakeControl
typeKPB…AE

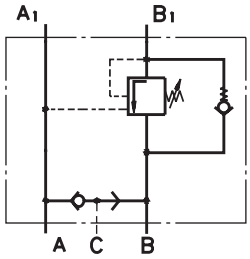

SingleOvercenterValves
withBrakeControl
typeKPB…BE

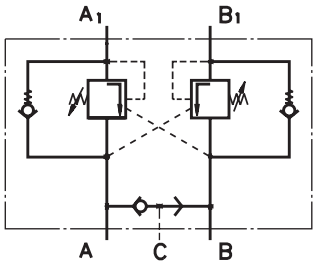

DualOvercenterValves
withBrakeControl
typeKPB…D

CONTENTS

ValvesforMP,MRandMHtypeKPBR... 43
Valves for MS type KPBS 44
ValvesforRWandHWtypeKPBW..... 45
Valves for MT type KPBT 46
Valves for MV type KPBV 47
SwitchvalvestypeKPWRandKPWS.... 48
SwitchvalvestypeKPWTandKPWV..... 49
Crossover Relief Valves 50
Valves for MP, MR and MH type KP...R ... 50
Valves for MS type KP...S 51
ValvesforRWandHWtypeKP...W..... 52
Valves for MT type KP...T 54
Valves for MV type KP...V 56
Order Code 58

SPECIFICATION DATA

Parameters	Type									
	KPBR...E	KPBS...E	KPBW...E	KPBR...D	KPBS...D	KPBW...D	KPBT...E	KPBT...D	KPBV...E	KPBV...D
FlowRate, l/min[GPM]	60 [15.85]						100 [26.4]		200 [52.8]	
RatedPressure*,bar[PSI]	60÷280 [870÷4060]						70÷250 [1015÷3625]			
PilotRatio	4,25:1									
Weight, kg	3,020	2,900	3,350	3,060	2,920	3,400	5,400	5,800	9,200	9,750
[lb]	[6.658]	[6.393]	[7.385]	[6.746]	[6.437]	[7.496]	[11.905]	[12.787]	[20.283]	[21.495]

*PressureSettingsareatflowrateof 5lpm[1.3GPM]andviscosity32mm/s[150SUS]at50 °C[122 °F].

PRESSURELOSSES

KPBR..., KPBS... and KPBW...

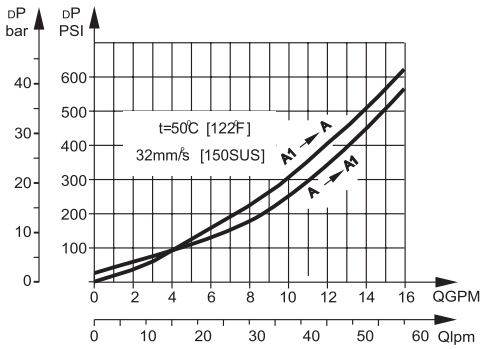

KPBT..

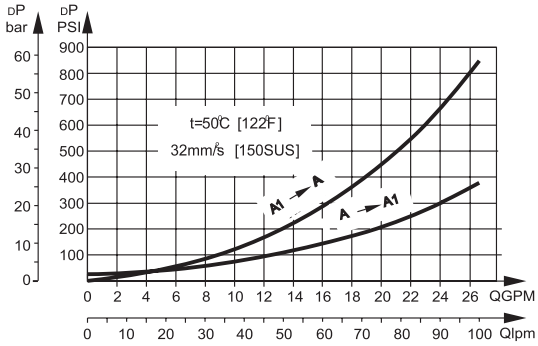

KPBV..

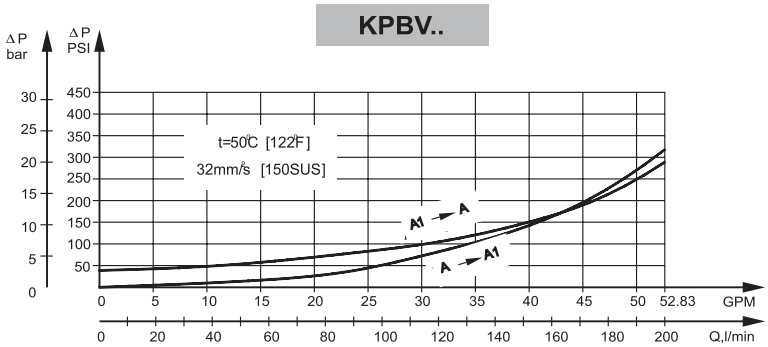

VALVESFORMP,MR,MHHYDRAULICMOTORS

SINGLEVALVE KPBR-250/1/E...

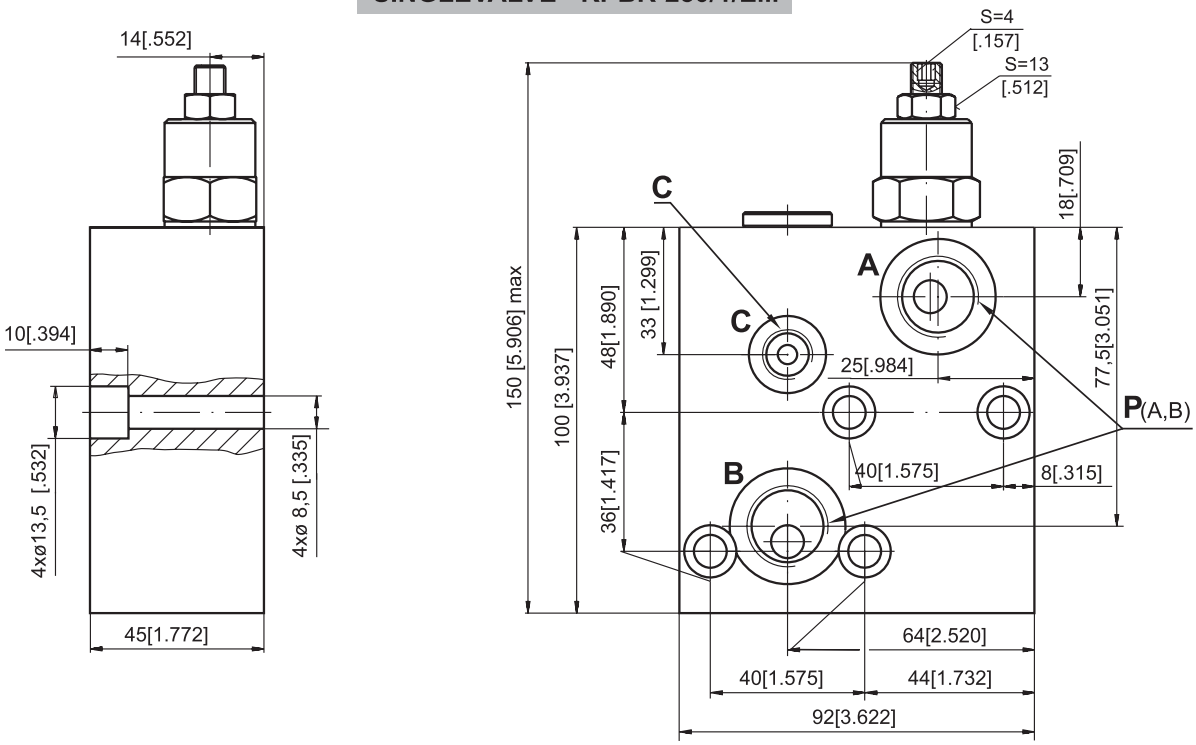

DUALVALVE KPBR-250/1/D...

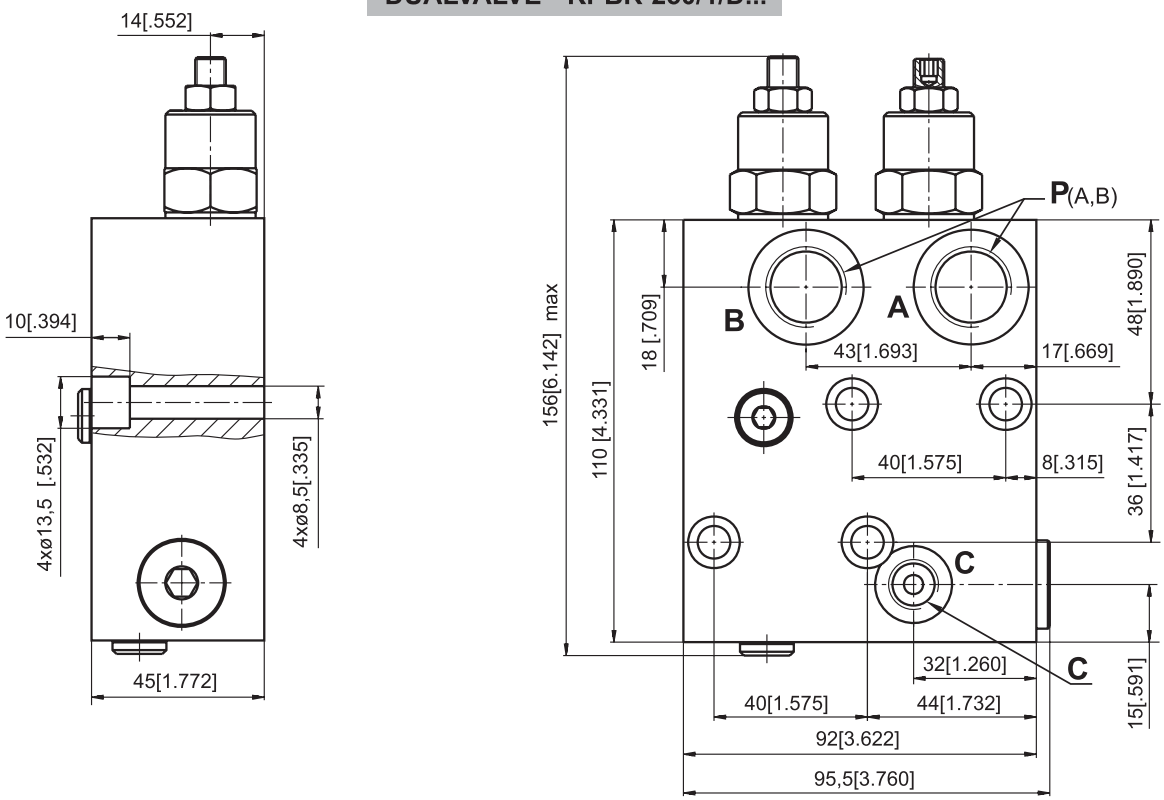

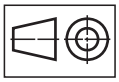

mm[in]

	Thread Ports-P (A,B)	Thread Port-C
-	G1/2 16[.63]depth	G1/4 12 [.47] depth
M	M22x1,5 16[.63]depth	M14x1,5 12 [.47] depth
A	7/8-14UNF O-ring 16[.63]depth	7/16-20UNF O-ring 12,7[.50]depth

Note:KPBR Blocksareinstalleddirectlyon MP, MR and MH Motors withfour screwsM8x 45-8.8DIN912 or 5/16-18UNC, 1.75 long ANSIB18.3 .Tighteningtorque 1,8 daNm[160 lb-in].

VALVESFORMSHYDRAULICMOTORS

SINGLEVALVE KPBS-250/1/E...

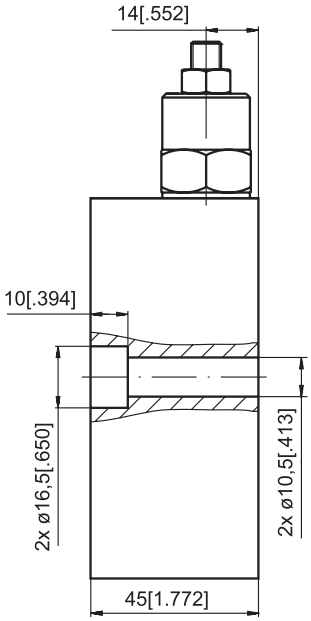

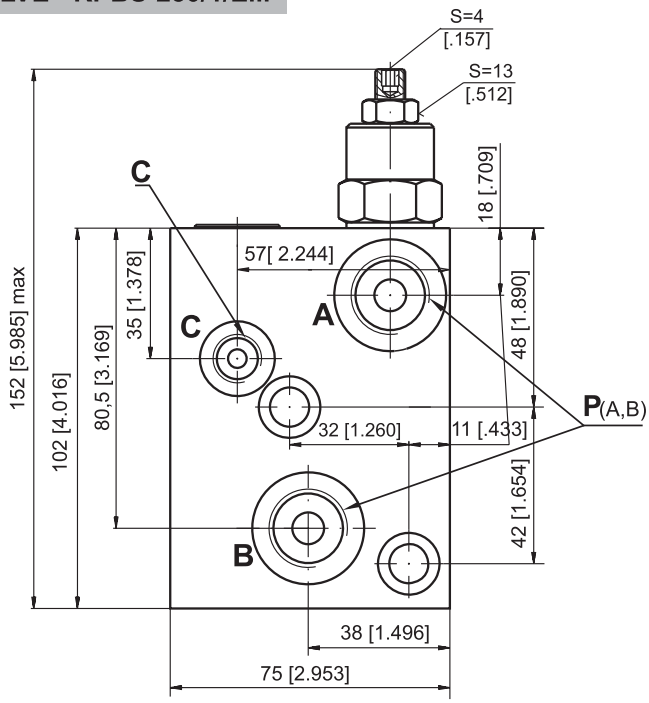

DUALVALVE KPBS-250/1/D...

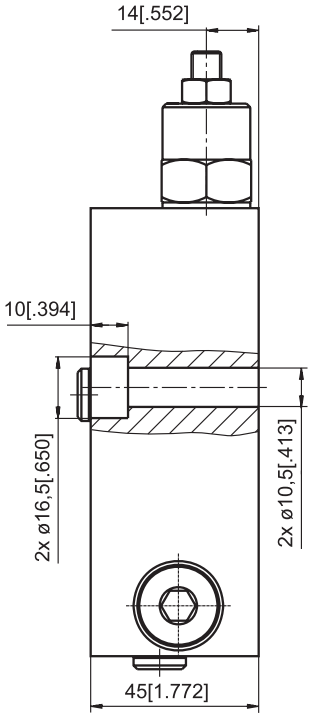

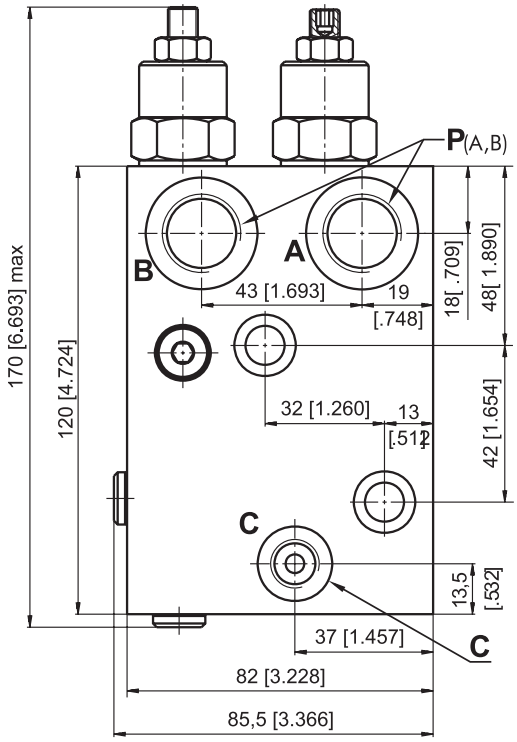

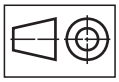

mm[in]

	Thread Ports-P (A,B)	Thread Port-C
-	G1/2 16[.63]depth	G1/4 12 [.47] depth
M	M22x1,5 16[.63]depth	M14x1,5 12 [.47] depth
A	7/8-14UNF O-ring 16[.63]depth	7/16-20UNF O-ring 12,7[.50]depth

Note:KPBS Blocksareinstalleddirectlyon MSMotorswithtwo screwsM10x 45-8.8DIN912 or 3/8-16UNC, 1.75 long ANSIB18.3 . Tighteningtorque3,5daNm[310lb-in].

VALVESFORRWandHWHYDRAULICMOTORS

DUALVALVE KPBW-250/1/D...

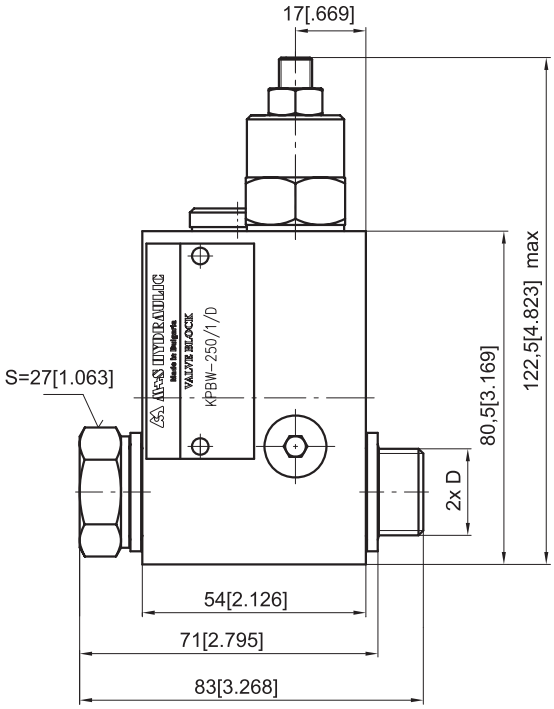

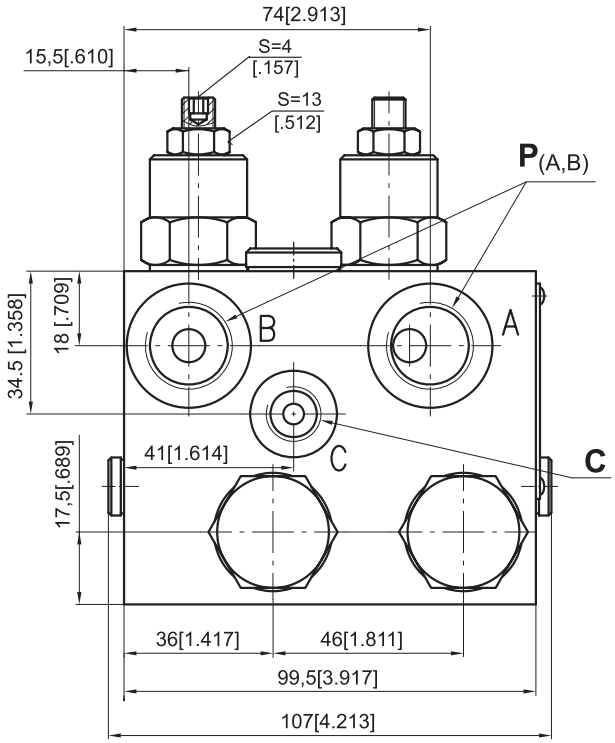

KPBW-...A

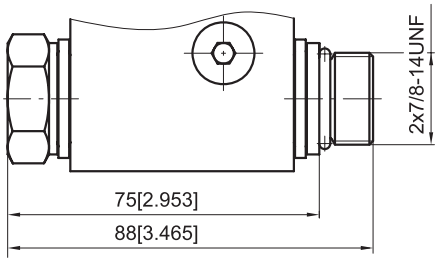

SINGLEVALVE KPBW-250/1/A .E

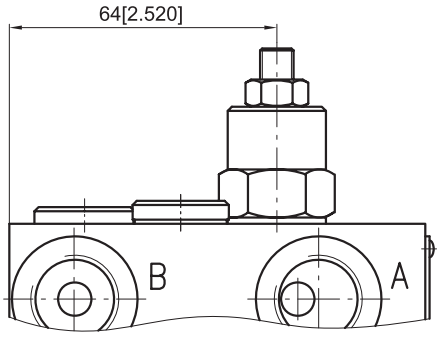

SINGLEVALVE KPBW-250/1/B E

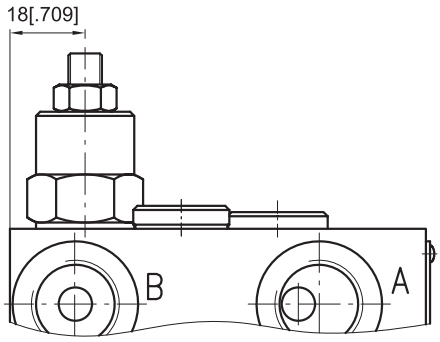

	Thread Ports-P (A,B)	Thread Port-C	Thread Ports- D
-	G1/2 16[.63]depth	G1/4 12 [.47] depth	G1/2 12 [.47]length
M	M22x1,5 16[.63]depth	M14x1,5 12 [.47] depth	M22x1,5 12 [.47]length
A	7/8-14UNF O-ring 16[.63]depth	7/16-20UNF O-ring 12,7[.50]depth	7/8-14UNF O-ring 13[.51]length

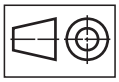

mm[in]

Note:KPBW Blocks assemblyto RWor HWmotors isdonewithtwoscrews(threadD)includedinthe valveset . Tighteningtorque8daNm[710lb-in].

VALVESFORMTHYDRAULICMOTORS

SINGLEVALVE KPBT-250/1/E...

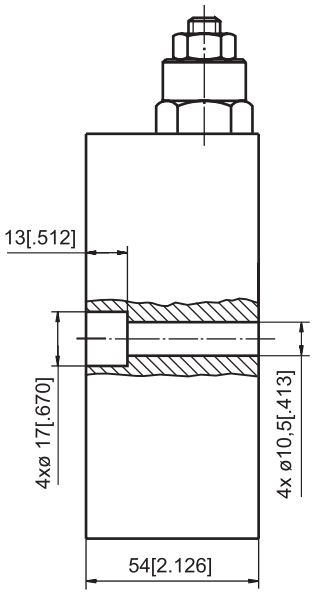

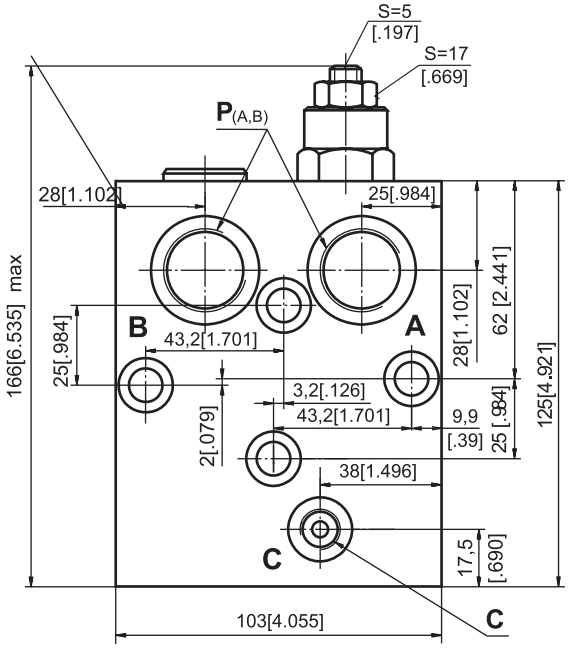

DUALVALVE KPBT-250/1/D...

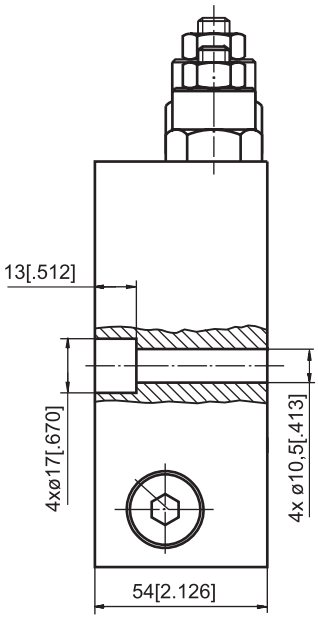

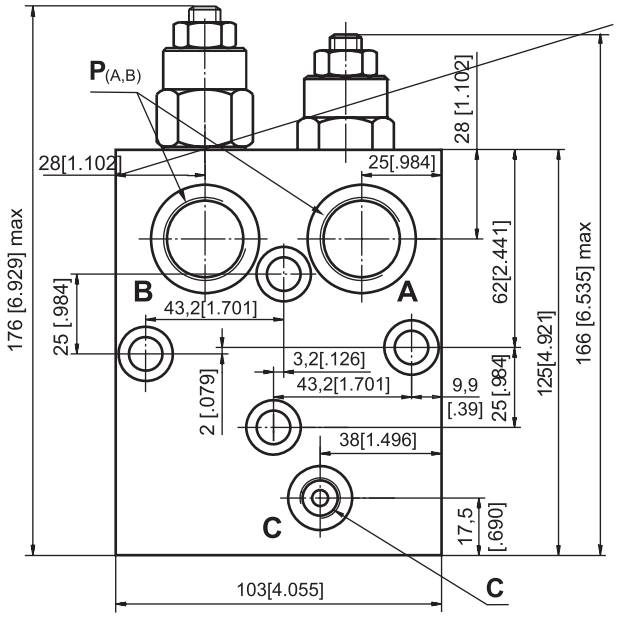

	Thread Ports-P (A,B)	Thread Port-C
-	G3/4 17[.67]depth	G1/4 14 [.55] depth
M	M27x2 17[.67]depth	M14x1,5 14[.55] depth
A	11/16-12UN O-ring 17[.67]depth	7/16-20UNF O-ring 12,7[.50]depth

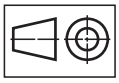

mm[in]

Note:KPBT Blocksareinstalleddirectlyon MTMotorswithfour screwsM10x50-8.8DIN912. Tighteningtorque3,5daNm[310lb-in].

VALVESFORMVHYDRAULICMOTORS

DUALVALVE KPBV-250/1/D...

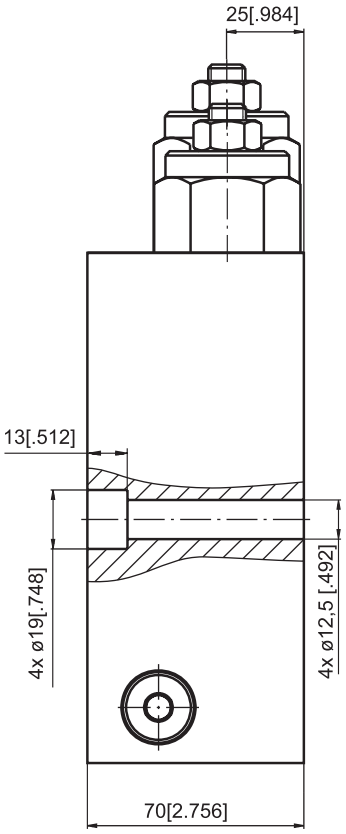

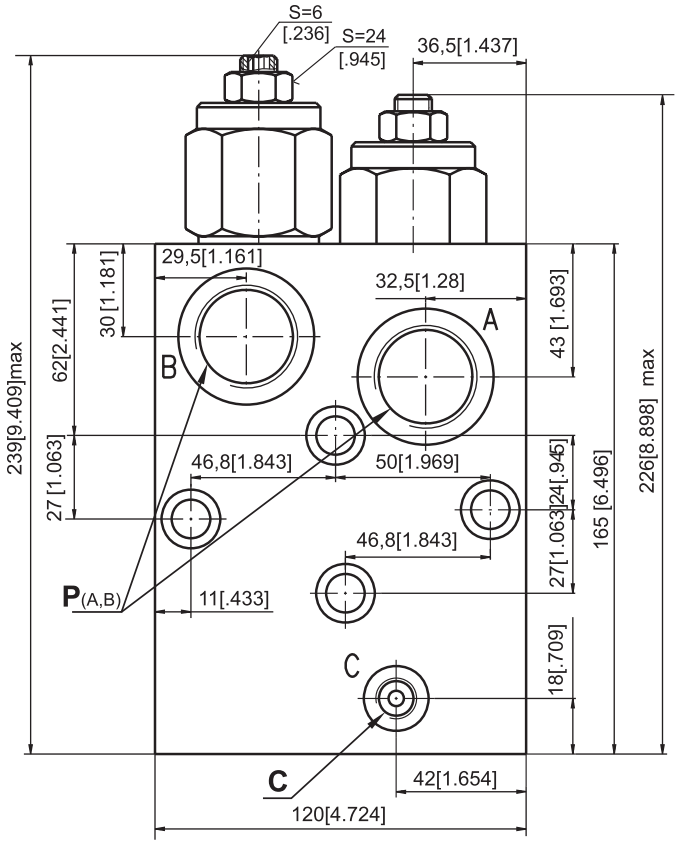

SINGLEVALVE KPBV-250/1/A E

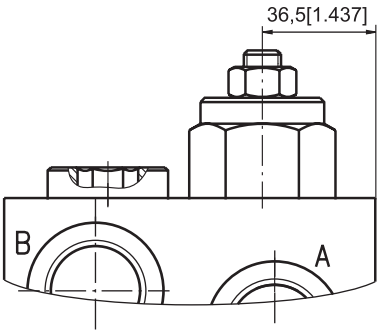

SINGLEVALVE KPBV-250/1/B E

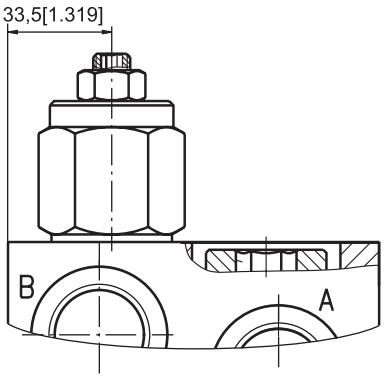

	Thread Ports-P (A,B)	Thread Port-C
-	G1 20[.79]depth	G1/4 14 [.55] depth
M	M33x2 20[.79]depth	M14x1,5 14[.55] depth
A	15/16-12UN O-ring 20[.79]depth	7/16-20UNF O-ring 12,7[.50]depth

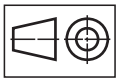

mm[in]

Note:KPBV Blocksareinstalleddirectlyon MVMotorswithfour screwsM12x70-8.8DIN912. Tighteningtorque6,5daNm[575lb-in].

SWITCHVALVE

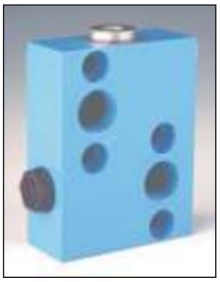

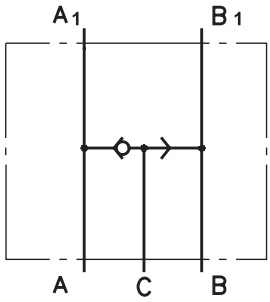

SPECIFICATION DATA

Parameters		Type	
		KPWR	KPWS
FlowRate,	l/min [GPM]	60	[15.85]
RatedPressure,bar	[PSI]	250	[3625]
Weight,	kg	0,850	0,670
	[lb]	[1.874]	[1.477]

VALVEFORMP,MR,MHHYDRAULICMOTORS KPWR

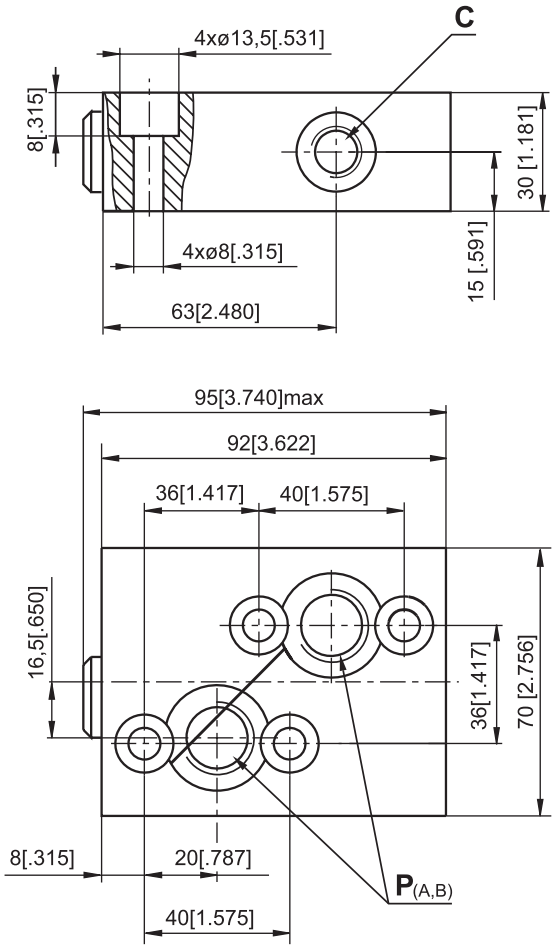

VALVEFOR MSHYDRAULICMOTORS KPWS

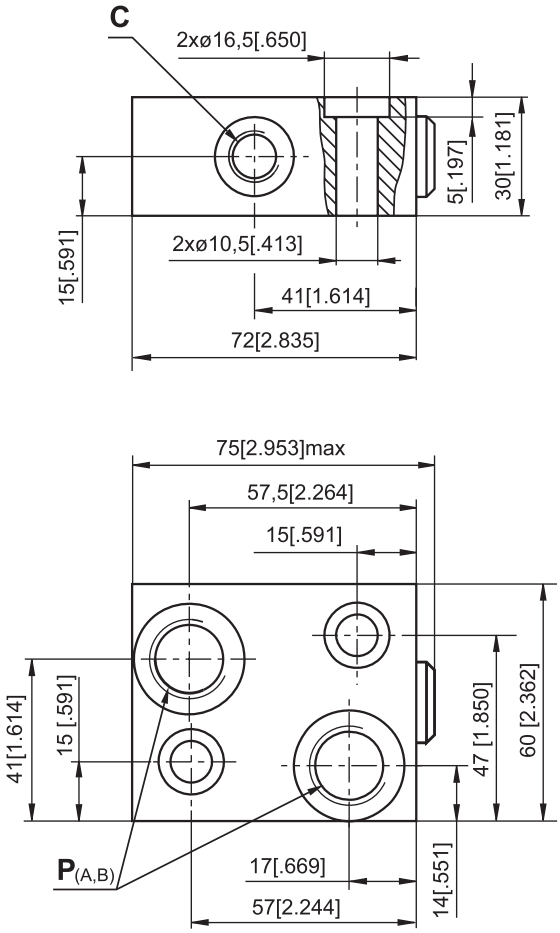

	Thread Ports-P (A,B)	Thread Port-C
-	G1/2 17[.67]depth	G1/4 14[.55] depth
M	M22x1,5 17[.67]depth	M14x1,5 14[.55] depth
A	7/8-14UNF O-ring 17[.67]depth	7/16-20UNF O-ring 12,7[.50]depth

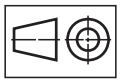

mm[in]

Note:KPWR Blocksareinstalleddirectlyon MP, MR and MH Motors withfour screwsM8x 35-8.8DIN912 or 5/16-18UNC, 1.5 long ANSIB18.3 .Tighteningtorque 1,8 daNm[160 lb-in].
KPWS Blocksareinstalleddirectlyon MSMotorswithtwo screws M10x35-8.8DIN912 or 3/8-16UNC, 1.5 long ANSIB18.3 . Tighteningtorque3,5daNm[336lb-in].

SWITCHVALVE(continued)

SPECIFICATION DATA

Parameters	Type	
	KPWT	KPWV
FlowRate,l/min	100	200
RatedPressure,bar	250	
Weight,kg	1,800	3,150

VALVEFORMTHYDRAULICMOTORS KPWT

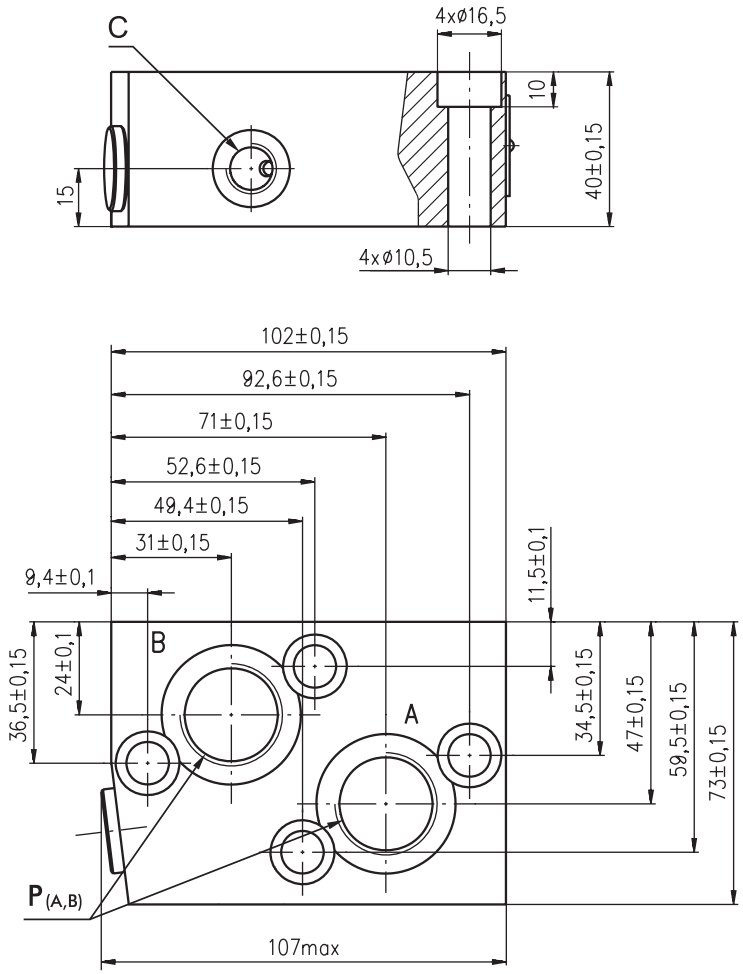

P(A,B) : G3/4(M27x2),17mmdepth
C : G1/4(M14x1,5),14mmdepth

VALVEFORMVHYDRAULICMOTORS KPWV

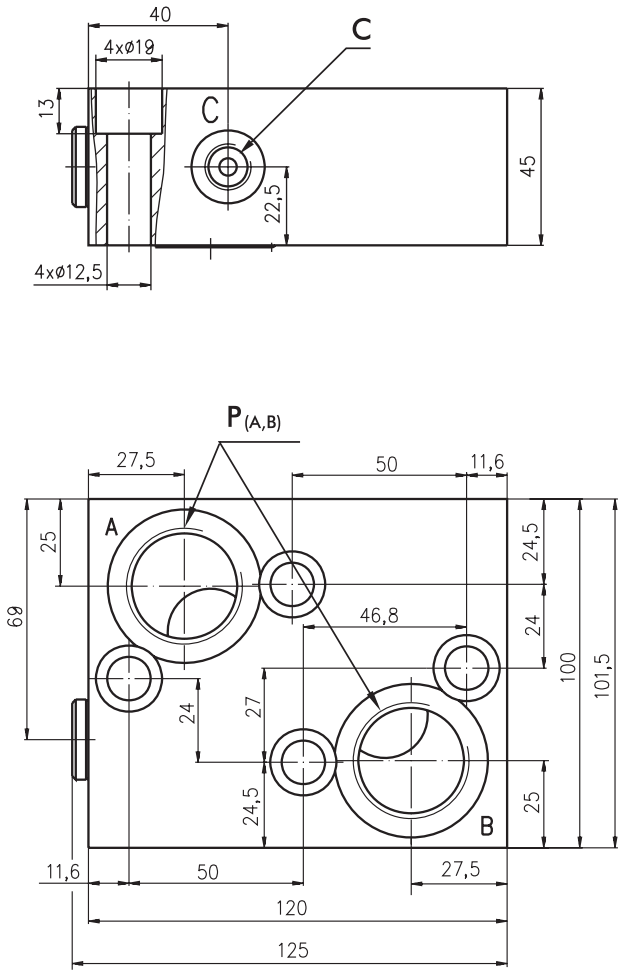

P(A,B) : G1-A(M33x2),20mmdepth
C : G1/4(M14x1,5),14mmdepth

Note: KPWTBlocksareinstalleddirectlyonMTMotorswithfour screws M10x40-8.8DIN912.
Tighteningtorque3,5 $^{+0,3}$ daNm.
KPWVBlocksareinstalleddirectlyonMVMotorswithfourscrewsM12x45-8.8DIN912.
Tighteningtorque6,5 $^{+0,5}$ daNm.

CROSSOVERRELIEFVALVES

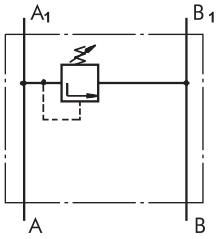

SingleCrossover
ReliefValve
type KPE …

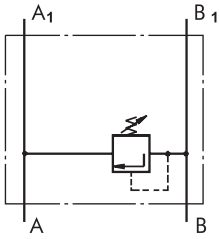

SingleCrossover
ReliefValve
type KPE …

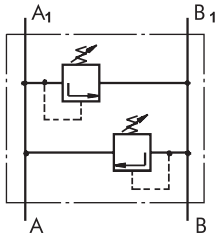

DualCrossover
ReliefValve
typeKPD…

SPECIFICATION DATA

Parameters	Type			
	KPER	KPDR	KPES	KPDS
FlowRate, lpm [GPM]	60 [15.85]			
PressureRange*, bar	30÷100 ;	50÷210 ;	80÷300	
[PSI]	]435÷1450 [	725÷3050 [	1160÷4350	]
Weight, kg	1,55		1,50	
[lb]	[3.42]		[3.31]	

*PressureSettingsareatflowrateof 5lpm [1.32 GPM]
andviscosity 32mm²/s [150SUS](50 °C [122° F]).

RatedPressure

A → 100bar [1450PSI]
B → 210bar [3050PSI]
C → 250bar [3625PSI]

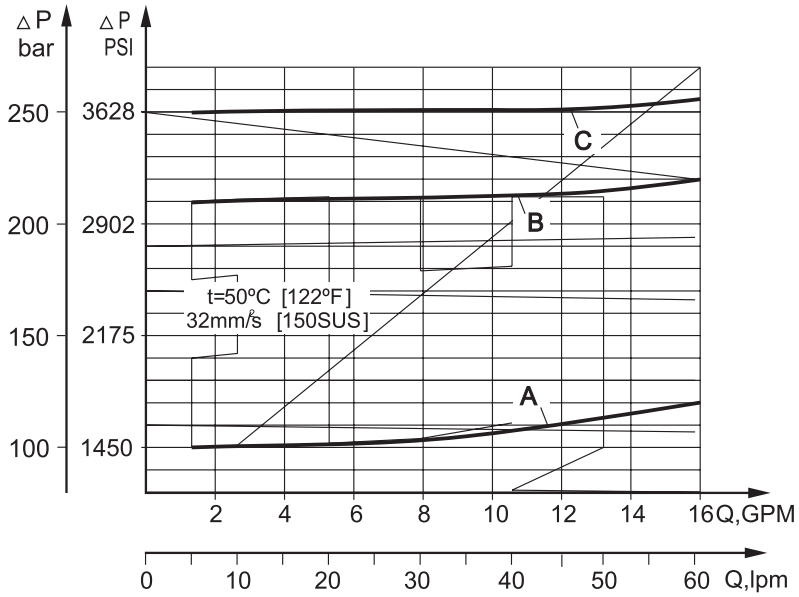

VALVESFORMP,MR,MH HYDRAULICMOTORS

VALVESFORMS HYDRAULICMOTORS

DUALVALVE KPDR

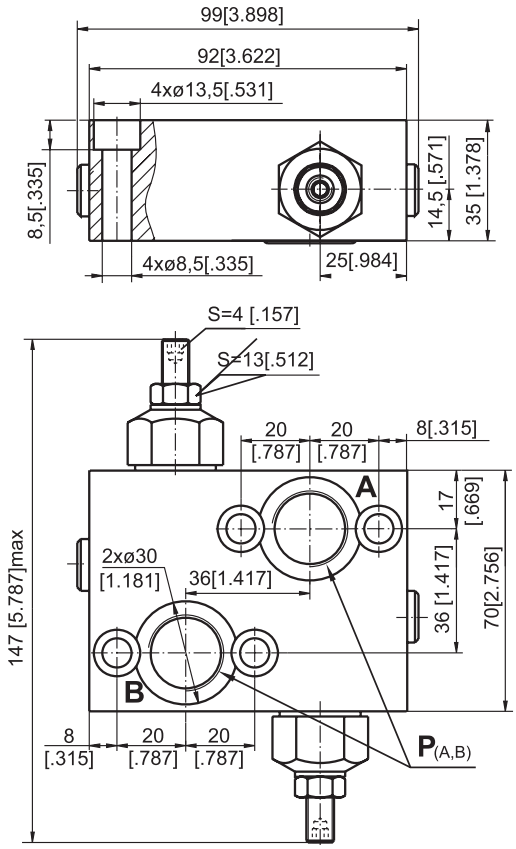

DUALVALVE KPDS

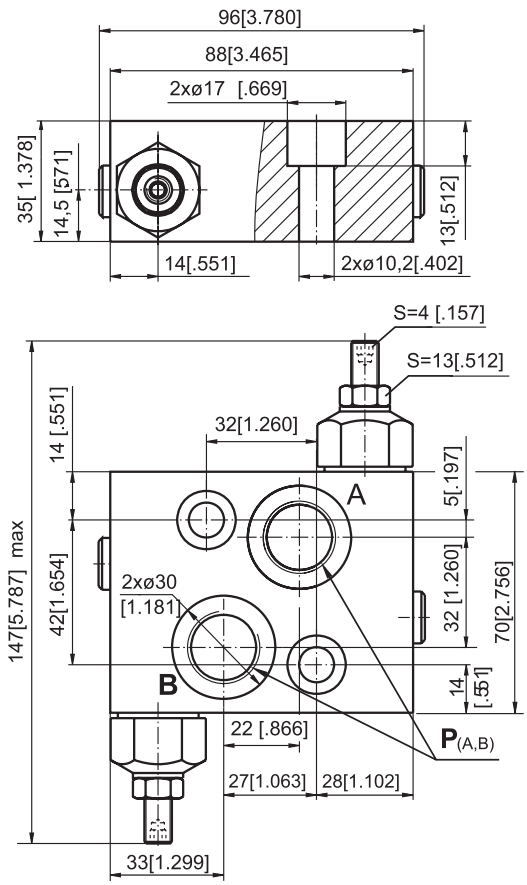

SINGLEVALVE KPER

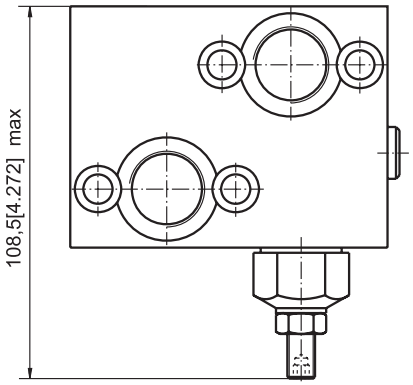

SINGLEVALVEKPES

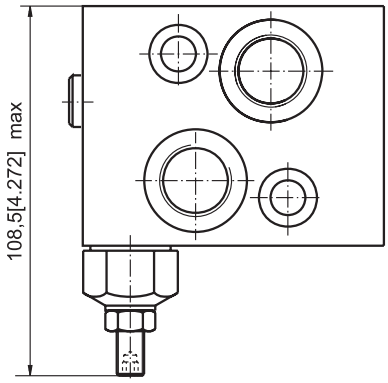

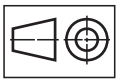

mm[in]

	Thread Ports-P (A,B)
-	G1/2 20 [.79]de pth
M	M22x1,5 20[.79]de pth
A	7/8-14UNF O-ring 20[.79]de pth

Note:KPDR and **KPER** Blocksareinstalleddirectlyon MP, MR and MH Motors withfour screwsM8x35-8.8DIN912 or 5/16-18UNC, 1.5 long ANSIB18.3 . Tighteningtorque 1,8 daNm[160 lb-in].

KPDS and **KPES** Blocksareinstalleddirectlyon MSMotorswithtwo screwsM10x35-8.8DIN912 or 3/8-16UNC, 1.5 long ANSIB18.3 . Tighteningtorque3,5daNm[310lb-in].

VALVES FOR RWandHW HYDRAULICMOTORS

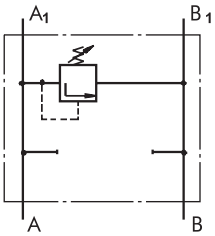

SingleCrossover
ReliefValve
typeKPEA W ...

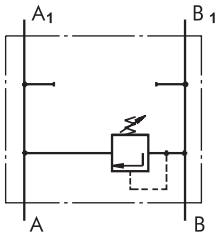

SingleCrossover
ReliefValve
typeKPEB W ...

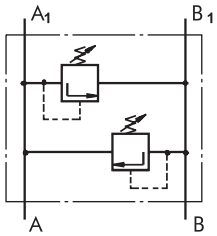

DualCrossover
ReliefValve
typeKPD W ...

SPECIFICATION DATA

Parameters	Type	
	KPE...W	KPDW
FlowRate, lpm [GPM]	60 [15.85]	
PressureRange*, bar [PSI]	5 ÷ 40; 30 ÷ 100 ; 80÷ 250 [75÷580]; [435÷1450]; [1160÷3625]	
Weight, kg [lb]	1,80 [3.97]	2,90 [6.39]

*PressureSettingsareatflowrateof 5lpm [1.32 GPM]
andviscosity 32mm²/s [150SUS](50 °C [122° F]).

RatedPressure

A → 100bar [1450PSI]
B → 210bar [3050PSI]
C → 250bar [3625PSI]

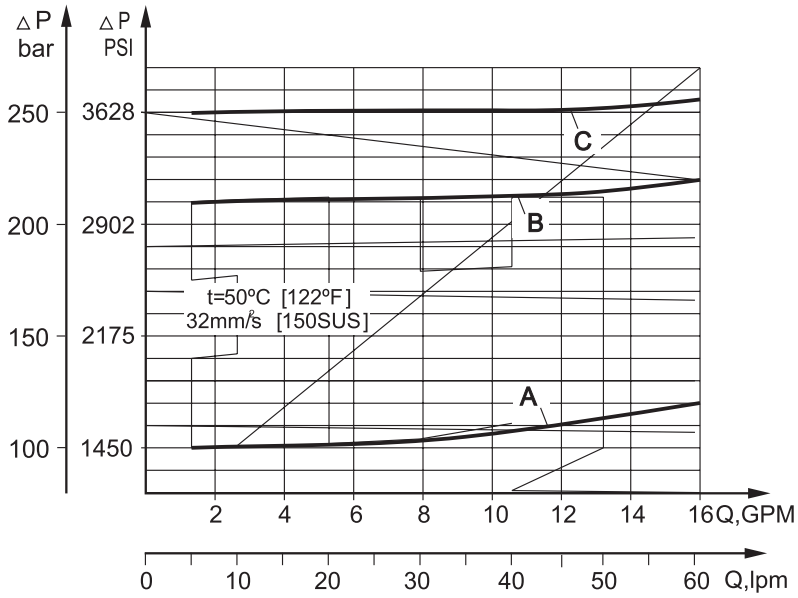

VALVESFORRWandHWHYDRAULICMOTORS

DUALVALVE KPDW...

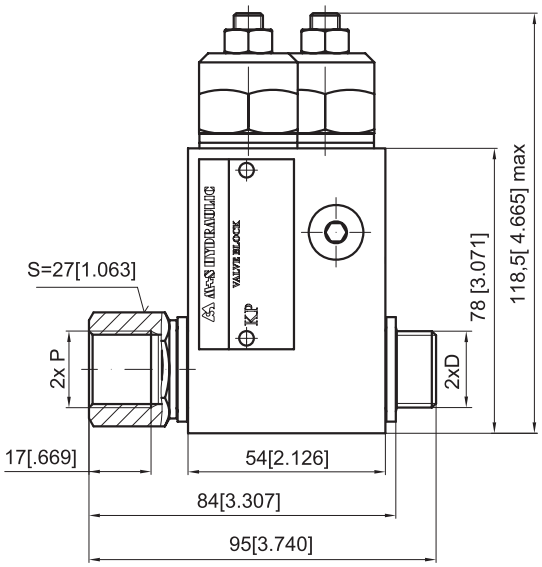

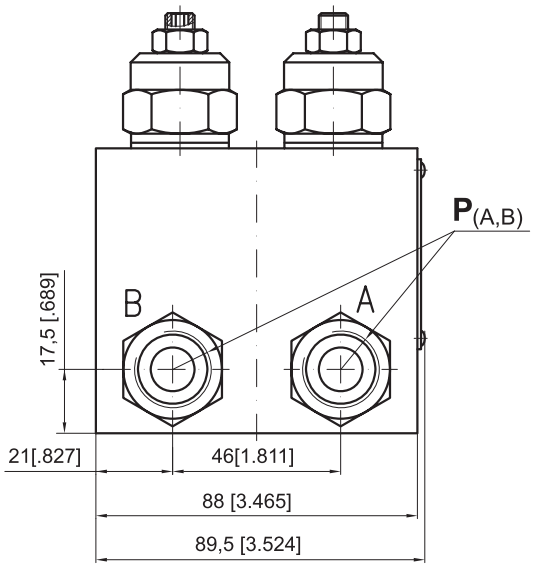

KPDW-...A

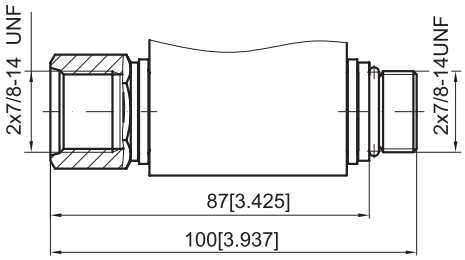

SINGLEVALVEKPEAW...

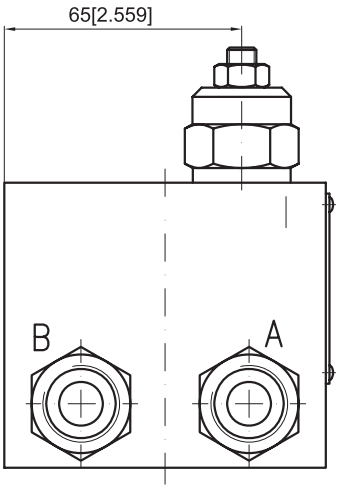

SINGLEVALVEKPEBW...

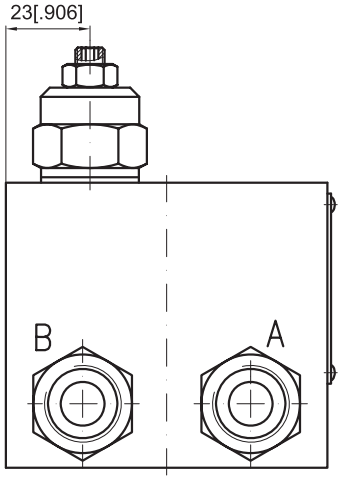

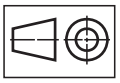

mm[in]

	Thread Ports-P (A,B)	Thread Ports- D
-	G1/2 16[.63]depth	G1/2 12 [.47]length
M	M22x1,5 16[.63]depth	M22x1,5 12 [.47]length
A	7/8-14UNF O-ring 16[.63]depth	7/8-14UNF O-ring 13[.51]length

Note:KPDW and **KPE..W** Blocks assemblyto RWor HWmotorsis donewithtwoscrews(thread **D**)includedinthevalveset . Tightening torque8daNm[710lb-in].

VALVES FORMTHYDRAULICMOTORS

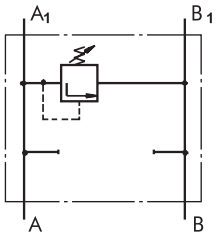

SingleCrossover
ReliefValve
typeKPEAT...

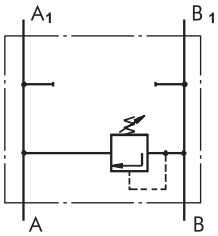

SingleCrossover
ReliefValve
typeKPEBT...

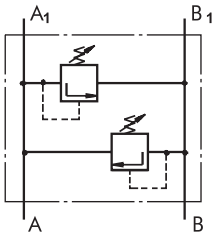

DualCrossover
ReliefValve
typeKPDT...

SPECIFICATION DATA

Parameters	Type	
	KPE ... T	KPDT
FlowRate, lpm [GPM]	120 [32]	
PressureRange*, bar [PSI]	80ч210 [1160ч3050]	
Weight, kg [lb]	5,10 [11.24]	5,54 [12.21]

*PressureSettingsareatflowrateof 5lpm [1.32 GPM]
andviscosity 32mm/s [150SUS](50 °C [122° F]).

RatedPressure

A → 50bar [725 PSI]
B → 100bar [1450PSI]
C → 150bar [2175 PSI]
D → 210bar [3045 PSI]

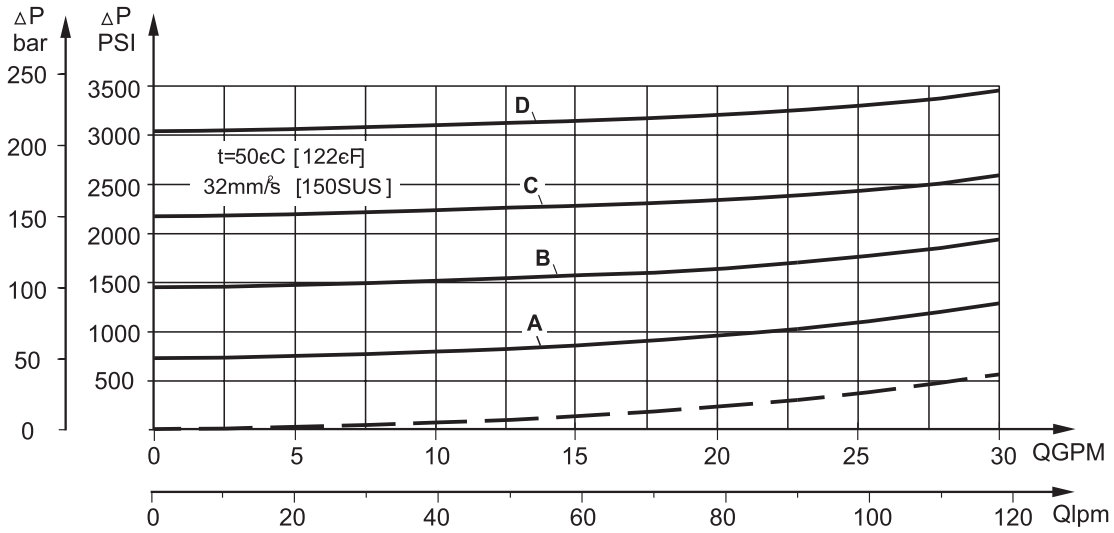

DUALVALVE KPDT...

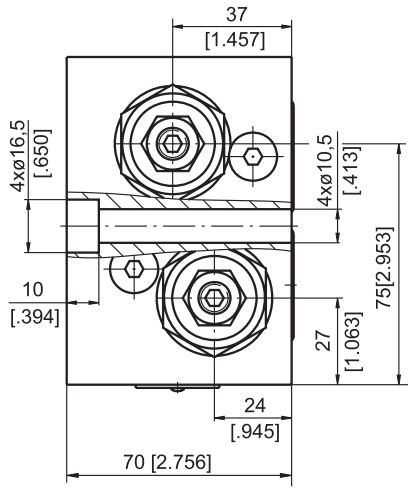

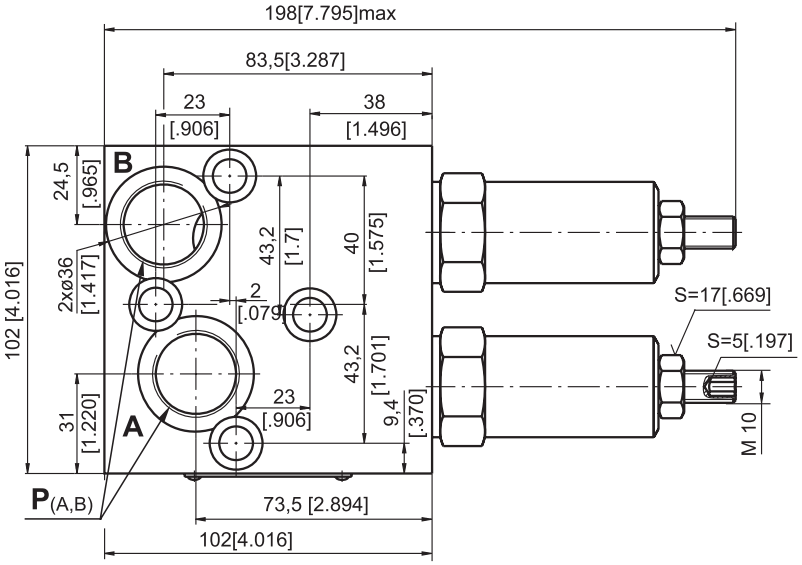

SINGLEVALVE KPEAT...

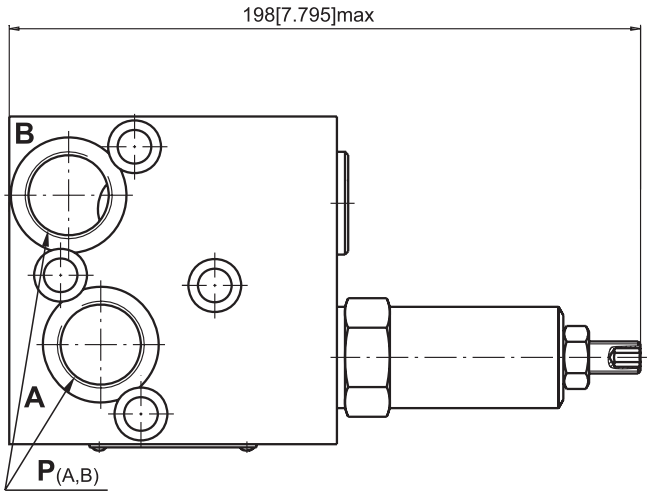

SINGLEVALVE KPEBT...

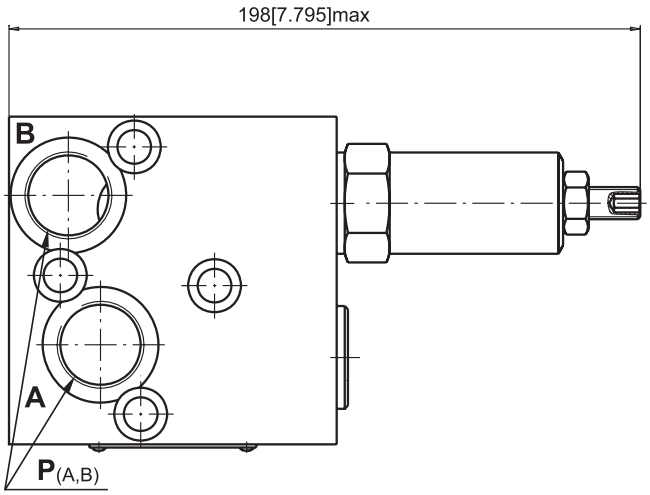

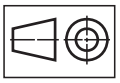

mm[in]

	Thread Ports-P (A,B)
-	G3/4 20 [.79]de pth
M	M27x2 20[.79]de pth
A	1 1/16-12UN O-ring 20[.79]de pth

Note:KPDT and **KPE...T** Blocksareinstalleddirectlyon MTMotorswithfour screwsM10x70-8.8DIN912. Tighteningtorque3,5daNm[310lb-in].

VALVESFORMVHYDRAULICMOTORS

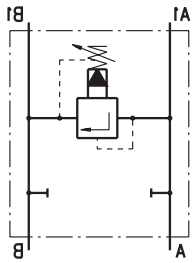

SingleCrossover
ReliefValve
typeKPEAV...

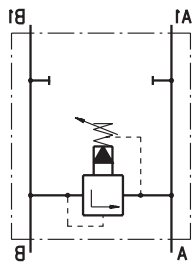

SingleCrossover
ReliefValve
typeKPEBV...

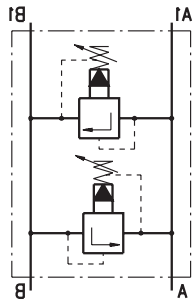

DualCrossover
ReliefValve
typeKPDV...

SPECIFICATION DATA

Parameters	Type		
	KPEAV	KPEBV	KPDV
FlowRate, lpm [GPM]	200 [53]		
PressureRange*, bar [PSI]	10÷100; 20÷250 ;[145÷1450 [290÷3625]		
Weight, kg [lb]	4,90 [10.8]	7,10 [15.65]	8,00 [17.64]

*PressureSettingsareatflowrateof 5lpm [1.3GPM] andviscosity 32mm²/s [150SUS](50 °C [122° F]).

RatedPressure

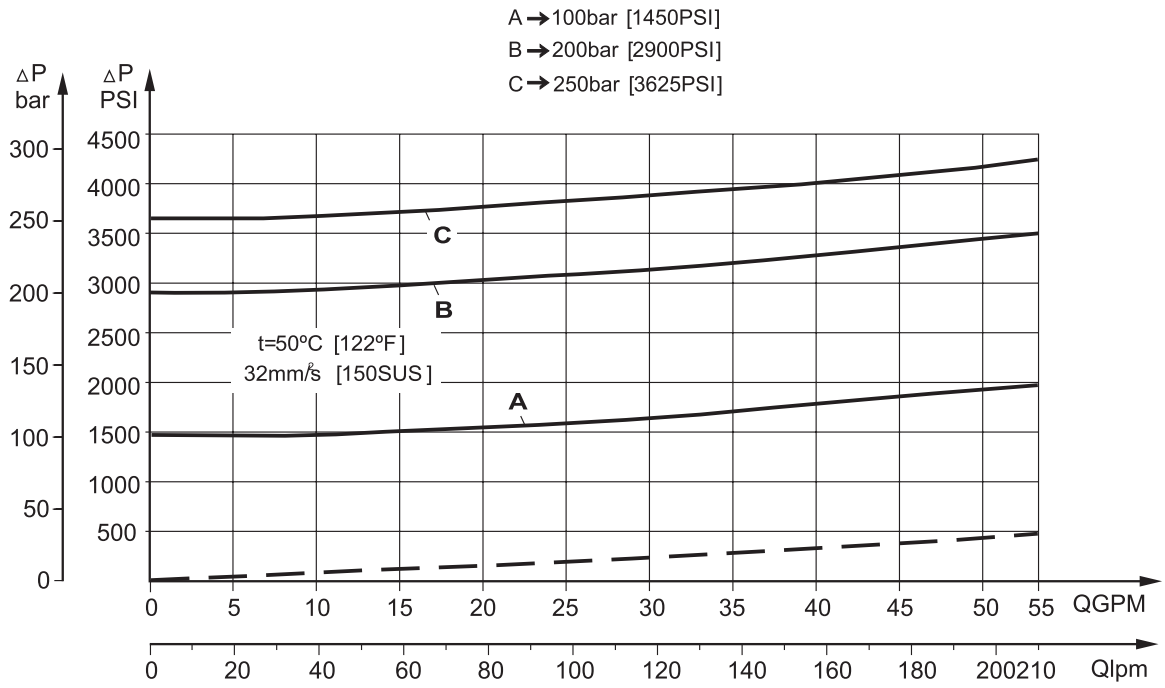

DUALVALVE KPDV

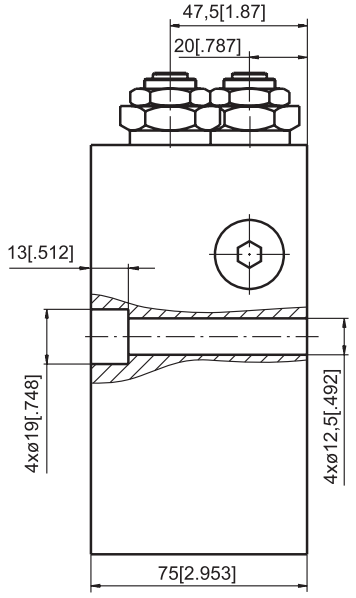

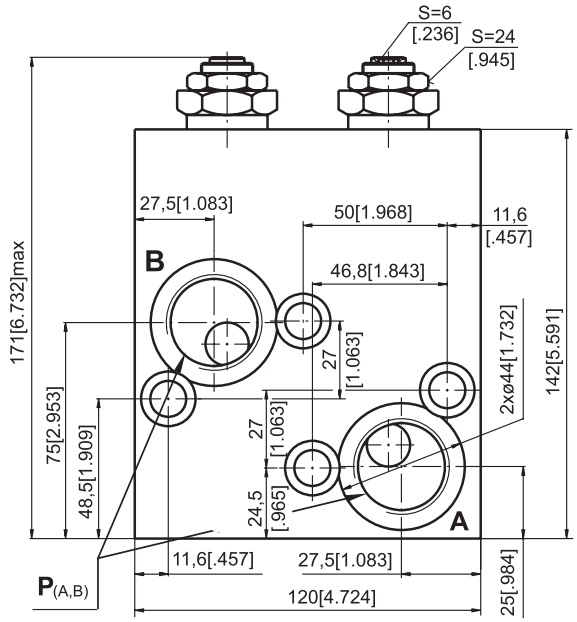

SINGLEVALVE KPEAV

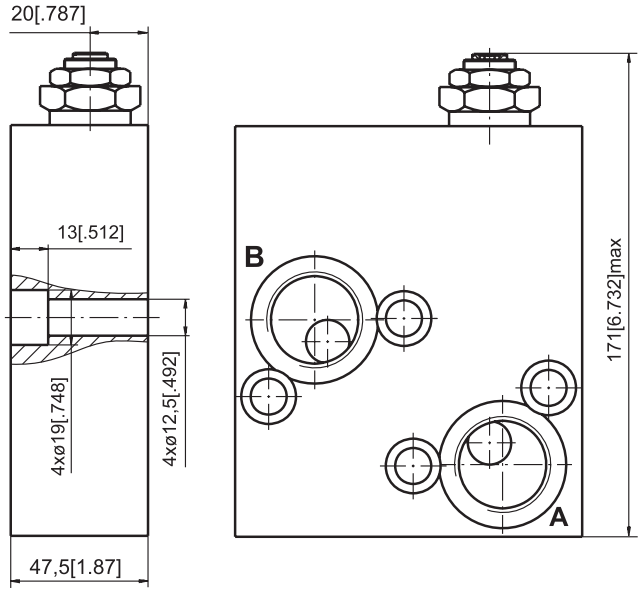

SINGLEVALVE KPEBV

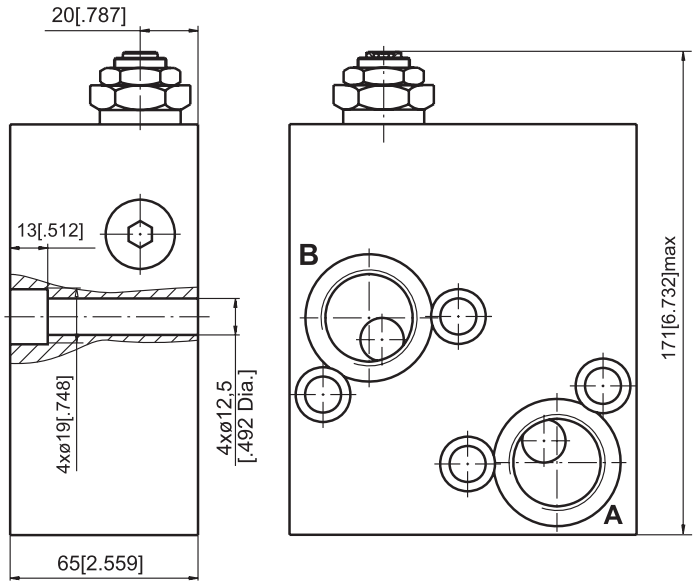

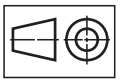

mm[in]

	Thread Ports-P (A,B)
-	G1-A 20 [.79]de pth
M	M33x2 20[.79]de pth
A	1 5/16 -12UN O-ring 20[.79]de pth

Note:KPDV Blocksareinstalleddirectlyon MV Motorswithfourscrews M12x75-8.8DIN912.
KPEAV Blocksareinstalleddirectlyon MV Motorswithfourscrews M12x50-8.8DIN912.
KPEBV Blocksareinstalleddirectlyon MV Motorswithfourscrews M12x65-8.8DIN912.
Tighteningtorque 7,5daNm[665 lb-in].

ORDERCODE-OVERCENTERVALVESWITHBRAKECONTROL

	1		2		3		4	5	6	7
KPB		-		/		/				

Pos.1-HousingType

R	-ValveblockforMP , MRandMHMotors
S	-ValveblockforMSMotors
W	-Valveblockfor RWandHW Motors
T	-ValveblockforMTMotors
V	-ValveblockforMVMotors

Pos.2-PressureRange,PSI[bar]

250	-1015÷3625[70÷250],StdSetting250bar@5lpm

Pos.3-PilotRatio

1	-4,25:1

Pos.4-NumberofValves

D	-TwoValves-Dual
E	-OneValve-Single(for **R** and **S** only)
AE	-OneValveonlineA-Single(for **T, V** and **W** only)
BE	- OneValveonelinB-Single(for **T,V** and **W** only)

Pos.5-ThreadedPorts

omit	-BSPPthread-ISO228
M	-Metricthread-ISO262
A	-UnifiedinchscrewthreadsANSIB1.1-1982

Pos.6-Option[Paint]**

omit	-noPaint
P	-Painted
PC	-CorrosionProtectedPaint

Pos.7-DesignSeries

omit -Factoryspecified

Notes: *Coloratcustomer'srequest.

ORDERCODE-SWITCHVALVES

	1	2	3	4
KPW				

Pos.1-HousingType

R	-ValveblockforMP,MRandMHMotors
S	-ValveblockforMSMotors
T	-ValveblockforMTMotors
V	-ValveblockforMVMotors

Pos.2-ThreadedPorts

omit	-BSPPthread-ISO228
M	-Metricthread-ISO262
A	-UnifiedinchscrewthreadsANSIB1.1-1982

Pos.3-Option[Paint]*

omit	-noPaint
P	-Painted
PC	-CorrosionProtectedPaint

Pos.4-DesignSeries

omit -Factoryspecified

Notes: *Coloratcustomer'srequest.

ORDERCODE-CROSSOVERRELIEFVALVE

	1	2	3		4	5	6
KP				/			

Pos.1-NumberofValves

D	-TwoValves-Dual
E	-OneValve-Single(for **R** and **S** only)
EA	-OneValveonlineA-Single(for **T,V** and **W** only)
EB	- OneValveonelinB-Single(for **T,V** and **W** only)

Pos.2-HousingType

R	-ValveblockforMP,MRandMHMotors
S	-ValveblockforMSMotors
W	-Valveblockfor RWandHW Motors
T	-ValveblockforMTMotors
V	-ValveblockforMVMotors

Pos.3-PressureRange,bar[PSI]

100	-30÷100[435÷1450],StdSetting100bar@5lpm
210	-50÷210[725÷3050],StdSetting210bar@5lpm
250	-20÷250[290÷3625],StdSetting250bar@5lpm
300*	-80÷300[1160÷4350],StdSetting250bar@5lpm

Pos.4-ThreadedPorts

omit	-BSPPthread-ISO228
M	-Metricthread-ISO262
A	-UnifiedinchscrewthreadsANSIB1.1-1982

Pos.5-Option[Paint]**

omit	-noPaint
P	-Painted
PC	-CorrosionProtectedPaint

Pos.6-DesignSeries

omit -Factoryspecified

Notes: * Usefulfortypes **R** and **S** only.
** Coloratcustomer'srequest.

TheValveBlocksaremanganophosphatized asstandard.

MOTOR-BRAKE SPECIALFEATURES

Special Feature Description	Order Code	Motortype				
		B/MR	MT/B	MTM/B	SW	TW
LowLeakage	LL	O	-	O	-	-
LowSpeed Valving	LSV	O	-	O	-	-
FreeRunning	FR	-	-	O	-	-
Reverse Rotation	R	O	O	O	-	-
Paint*	P	O	O	O	O	O
Corrosion ProtectedPaint*	PC	O	O	O	O	O
CheckValves		S	S	-	S	S

* coloratcustomer'srequest.

O Optional
- Notapplicable
S Standard

APPLICATIONCALCULATION

VEHICLEDRIVECALCULATIONS

1.Motorspeed:n, RPM

$$n=\frac{2,65 \times v_{km} \times i}{R_m} \qquad n=\frac{168 \times v_{ml} \times i}{R_{in}}$$

v_{km}- vehiclespeed,km/h;
v_{ml}- vehiclespeed,mil/h;
R_m- wheelrollingradius,m;
R_{in}- wheelrollingradius,in;
i- gearratiobetweenmotorandwheels.
Ifnogearbox,use i=1.

2.Rollingresistance:RR, daN [lbs]
The resistance force resulted in wheels contact with differentsurfaces:

$$RR=G \times$$

G- totalweightloadedonvehicle,daN[lbs];
- rollingresistancecoefficient(Table1).

Table 1

Rolling resistance coefficient In case of rubber tire rolling on different surfaces	
Surface	
Concrete- faultless	0.010
Concrete- good	0.015
Concrete- bad	0.020
Asphalt- faultless	0.012
Asphalt- good	0.017
Asphalt- bad	0.022
Macadam- faultless	0.015
Macadam- good	0.022
Macadam- bad	0.037
Snow- 5 cm	0.025
Snow- 10 cm	0.037
Polluted covering- smooth	0.025
Polluted covering- sandy	0.040
Mud	0.037ч0.150
Sand- Gravel	0.060ч0.150
Sand- loose	0.160ч0.300

3.Graderesistance:GR, daN[lbs]

$$GR=G \times (\sin\alpha + \rho \times \cos\alpha)$$

-gradientnegotiationangle(Table2)

Table 2

Grade %	α Degrees	Grade %	α Degrees
1%	0є 35'	12%	6є 5'
2%	1є 9'	15%	8є 31'
5%	2є 51'	20%	11є 19'
6%	3є 26'	25%	14є 3'
8%	4є 35'	32%	18є
10%	5є 43'	60%	31є

4.Accelerationforce:FA, daN[lbs]
Force **FA** necessary for acceleration from 0 to maximum speed **v** andtime **t** canbecalculatedwithaformula:

$$FA=\frac{v_{km} \times G}{3,6 \times t},[daN] \qquad FA=\frac{v_{ml} \times G}{22 \times t},[lbs];$$

FA- accelerationforce, daN[lbs] ;
t- time,[s].

5.Tractiveeffort:DP ,daN[lbs]
TractiveeffortDPistheadditionalforceoftrailer.Thisvalue willbeestablishedasfollows:
-acc.toconstructor'sassessment;
-as calculating forces in items 2, 3 and 4 of trailer; the calculatedsumcorrespondstothetractiveeffortrequested.

6.Totaltractiveeffort:TE, daN[lbs]
Totaltractiveeffort **TE** istotaleffortnecessaryforvehicle motion;thatthesumofforcescalculatedinitemsfrom2to5 andincreasedwith10%becauseofairresistance.

$$TE=1,1 \times (RR + GR + FA + DP)$$

RR- forceacquiredtoovercometherollingresistance;
GR- forceacquiredtoslopeupwards;
FA- forceacquiredtoaccelerate(accelerationforce);
DP- additionaltractiveeffort(trailer).

7.MotorTorquemoment:M, daNm[lb-in]
Necessarytorquemomentforeveryhydraulicmotor:

$$M=\frac{TE \times R_m[R]_{in}}{N \times i \times h_M}$$

N- motornumbers;
$_M$- mechanicalgearefficiency(ifitisavailable).

8.Cohesionbetweentireandroadcovering:M $_w$, daNm [lb-in]

$$M_w=\frac{G_W \times f \times R_m[R]_{in}}{i \times h_M}$$

Toavoidwheelslipping, thefollowingconditionshouldbe observed $M_W > M$
f -frictionalfactor;
G_w- totalweightoverthewheels, daN[lbs] .

Table 3

Surface	Frictional factor f
Steel on steel	0.15 ч 0.20
Rubber tire on polluted surface	0.5 ч 0.7
Rubber tire on asphalt	0.8 ч 1.0
Rubber tire on concrete	0.8 ч 1.0
Rubber tire on grass	0.4

9.Radialmotorloading:P_{rad}, daN [lbs]
When motor is used for vehicle motion with wheels mounted directly on motor shaft, the total radial loadingofmotorshaft **P_{rad}** isasumofmotionforceand weightforceactingononewheel.

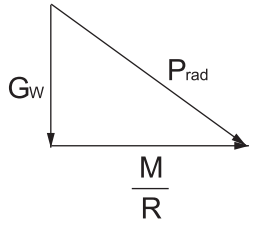

$$P_{rad}=\sqrt{G_w^2+\left(\frac{M}{R}\right)^2}$$

G_w - Weight heldbywheel;
P_{rad} - Totalradialloadingofmotorshaft;
M/R- Motionforce.

Inaccordancewithcalculatedloadingsthesuitablemotorfromthecatalogueisselected.

DRAINAGESPACEANDDRAINAGEPRESSURE

Advantagesinoildrainagefromdrainspace: Cleaning; Cooling and Seallifetimeprolonging.

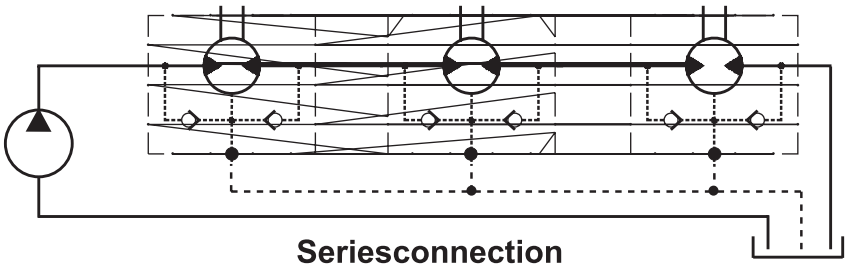

Seriesconnection

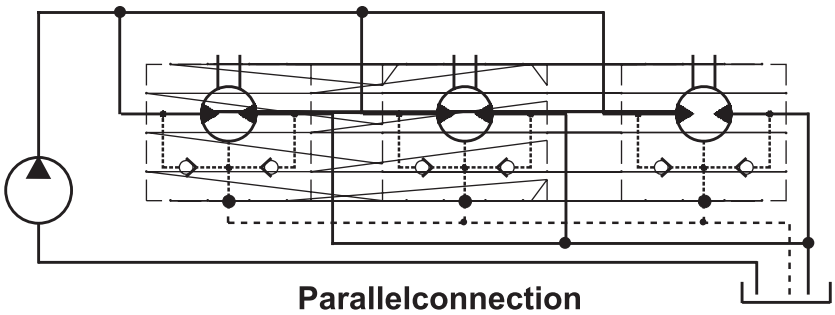

Parallelconnection