Hydraulic Motors Type MAP28

Heavy Duty Axial Piston Motors Fixed Displacement

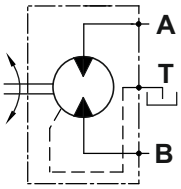

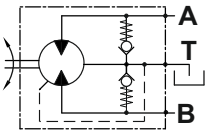

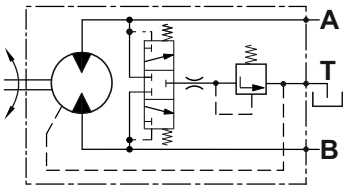

open drain line is always required

APPLICATION

- » Agricultural machines
- » Road building machines
- » Mining machinery
- » Food industry machines
- » Swing drives
- » Hydraulic transmissions
- » Vibration machines
- » Fan drives
- » Special vehicles

OPTIONS

- » Swash plate
- » Flange options
- » Port options
- » Shaft options
- » High pressure ports
- » Integrated valves

ADVANTAGES

- » High starting torque
- » Smooth operation
- » Long service life
- » High power density

GENERAL

Displacement,	cm^3/rev [in^3/rev]	**22,15÷28.47 [1.35÷1.74]**
Max. Speed,	RPM	**4200**
Max. Torque,	Nm [lb-in]	**159 [1407]**
Max. Output,	kW [HP]	**48 [64]**
Max. Pressure Drop,	bar [PSI]	**350 [5080]**
Max. Oil Flow,	l/min [GPM]	**120 [31.7]**
Min. Speed,	RPM	**500**
Fluid		**Mineral based- HLP(DIN 51524) or HM(ISO 6743/4)**
Temperature Range,	^oC [^oF]	**-40÷82 [-40÷180]**
Optimal Viscosity Range,	mm^2/s [SUS]	**12÷68 [66÷311]**
Filtration		**ISO code 18/16/13 (Min. recommended fluid filtration of 10 micron)**

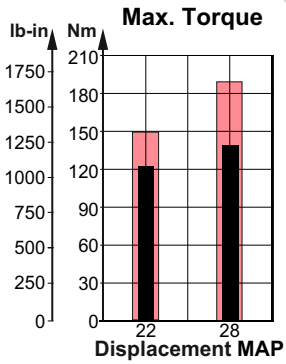

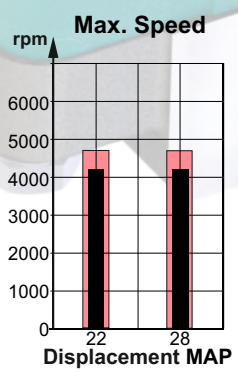

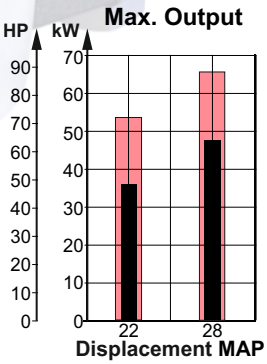

Intermittent values Continuous values

SECTION VIEW

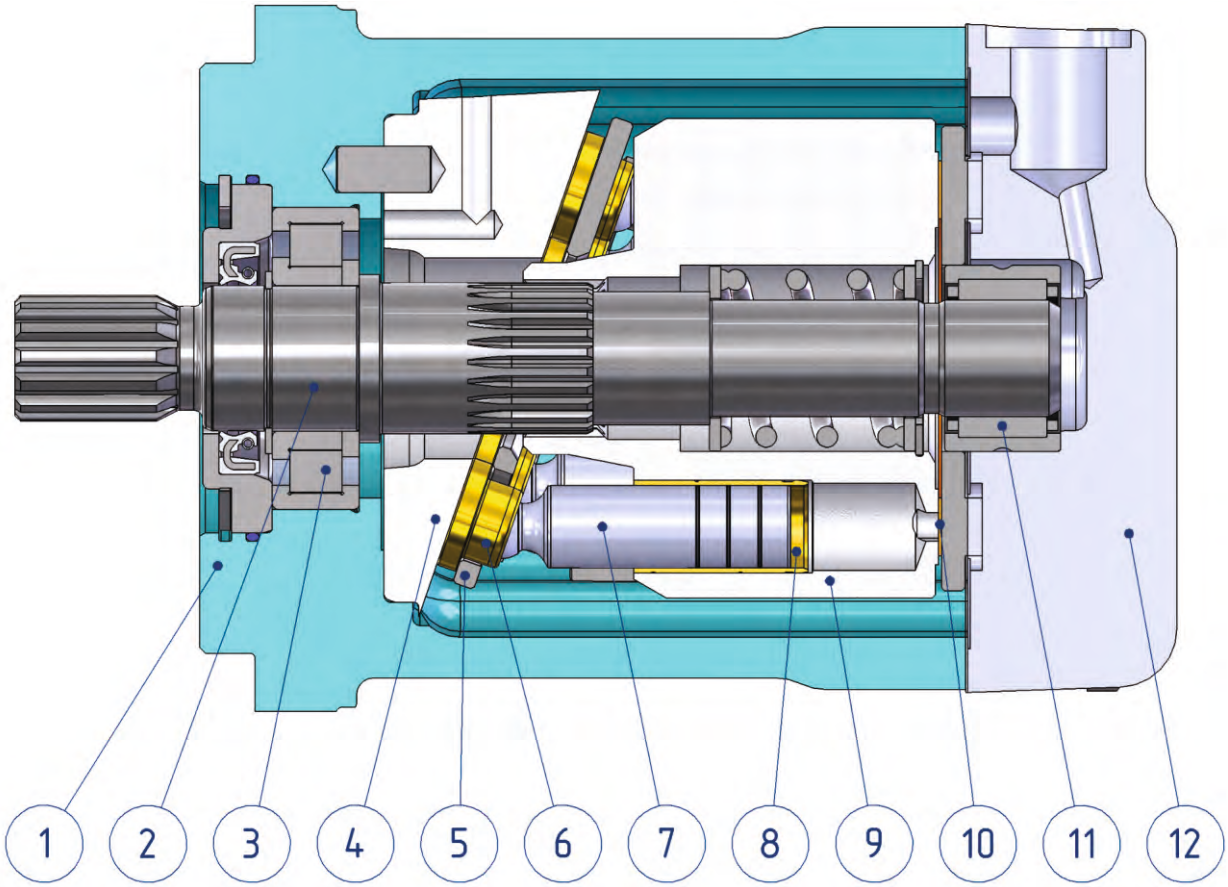

1. Cast iron body
2. Hardened shaft
3. Robust radial - axial roller bearing
4. Solid swash plate
5. Retainer plate
6. Improved piston shoes
7. Improved pistons
8. Brass bushings
9. Hardened steel cylinder block
10. Bimetal distributor
11. Needle bearing
12. Solid end cover

The heavy duty design of MAP motor gains big advantage over the typical swash plate motors. The starting torque is close to the starting torque of the bent axis motors and the total efficiency of our design in normal working modes is similar to the bent axis motors. The main advantage of our design over the bent axis motors is that the pulsations and vibrations during the operation are much less. Another advantage is that the swash plate motors are more reliable than the bent axis motors.

SPECIFICATION DATA

Type		MAP 22	MAP 28
Displacement, cm.^{3}/rev. [in.^{3}/rev.]		22.15 [1.35]	28.47 [1.74]
Max. Speed, [RPM]	Cont.	4200	4200
	Int.*	4700	4700
Max. Torque,*** Nm [lb-in]	Cont.	123 [1088]	159 [1407]
	Int.**	148 [1310]	190 [1682]
Output, kW [HP]	Cont.	37 [50]	48 [64]
	Int.**	54 [72]	70 [94]
Max. Pressure, bar [PSI]	Cont.	350 [5080]	350 [5080]
	Int.**	420 [6100]	420 [6100]
	Peak	450 [6527]	450 [6527]
Max. Oil Flow, l/min [GPM]	Cont.	93 [24.6]	120 [31.7]
	Int.*	104 [27.5]	134 [35.4]
Torque Constant ***** Nm/bar [lb-in/PSI]		0.32 [0.194]	0.41 [0.25]
Speed Constant ***** RPM/(l/min) [RPM/GPM]		42.9 [162.4]	33.4 [126.3]
Permissible Shaft Load (for standard bearing) max Axial****	N[lb]	Fa=1300 [292]	
max Radial****	N[lb]	Fr=2200 [495]	
Min. Speed, [RPM]		500	
Max. Pressure in Drain Line, bar [PSI]		5 [70] open drain line is always required	
Weight, kg [lb]		11.3 [24.9]	

Peak pressure is highest allowable pressure, may occur for max. 1% of every minute;
* Intermittent speed (flow): for pressure up to 150[2200] bar[PSI];
** Intermittent load: the permissible values may occur for max. 10% of motor lifetime;
*** Theoretical torque;
**** The calculated max values are based on the optimal direction of the forces Fr, Fa and optimal position of the shaft.
***** The constant values are used for calculation of torque and speed with motor efficiencies η_v=0.95 and η_{mh}=0.9.

1. The recommended output power for continuous operations should not be exceeded.
2. Recommended filtration as per ISO 4406 cleanliness code 18/16/13 or better. This filtration corresponds to SAE AS 4059 8A/7B/7C. Nominal filtration - 10 micron or better.
3. Recommended a premium quality, anti-wear type mineral based hydraulic oil, HLP(DIN51524) or HM(ISO6743/4).
4. Recommended oil viscosity - 12...68 cSt or see page 68.
5. Recommended maximum system operating temperature - 82°C [180°F].
6. To ensure optimum life of the motor, fill it up with fluid prior to load it and run with moderate load and speed for about 10-15 minutes.

Hint: Motor Torque = Torque Constant * Pressure Drop **Rotation Speed = Speed Constant * Oil Flow**

The constant values are mentioned for rough calculations. Motor torque and rotation speed for a particular project are depending on the real operating conditions. For more detail calculations please see efficiencies on next page and formulas on page 69.

FUNCTION DIAGRAMS

The below efficiencies are applied for all displacements.

VOLUMETRIC EFFICIENCIES

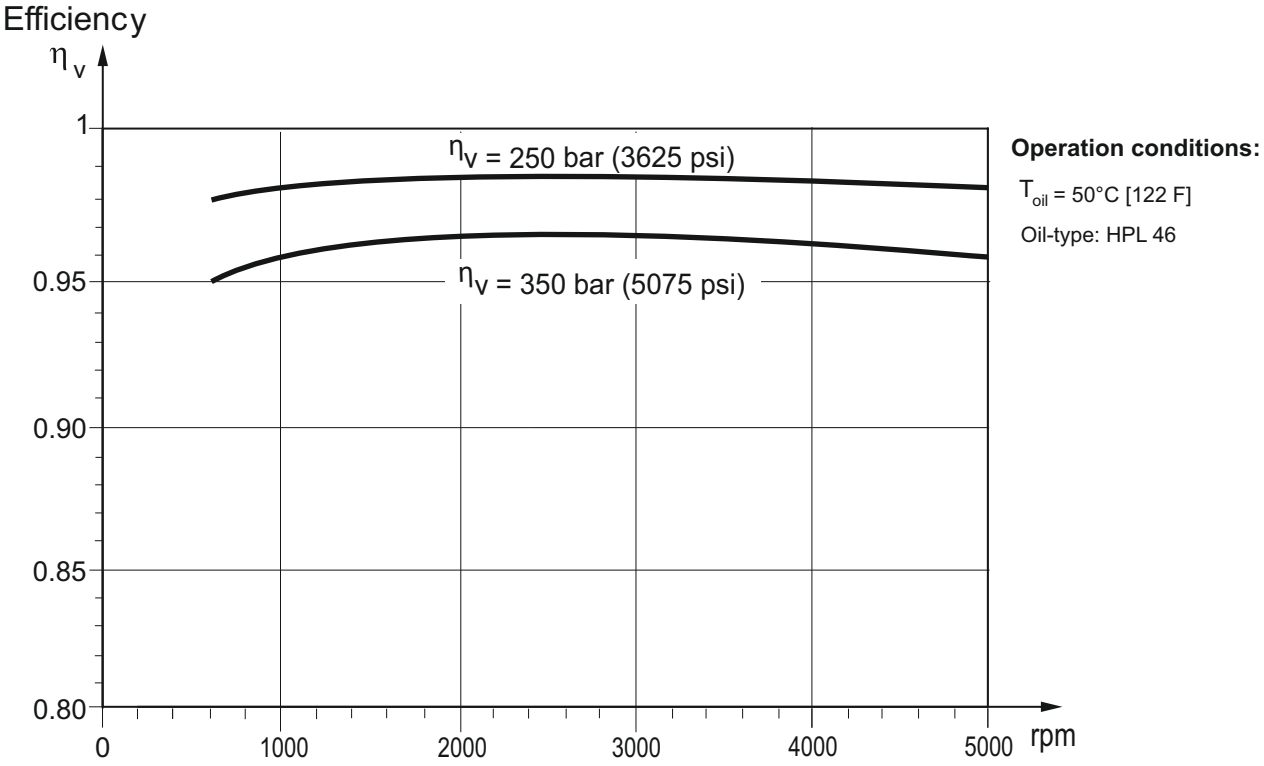

OVERALL EFFICIENCIES

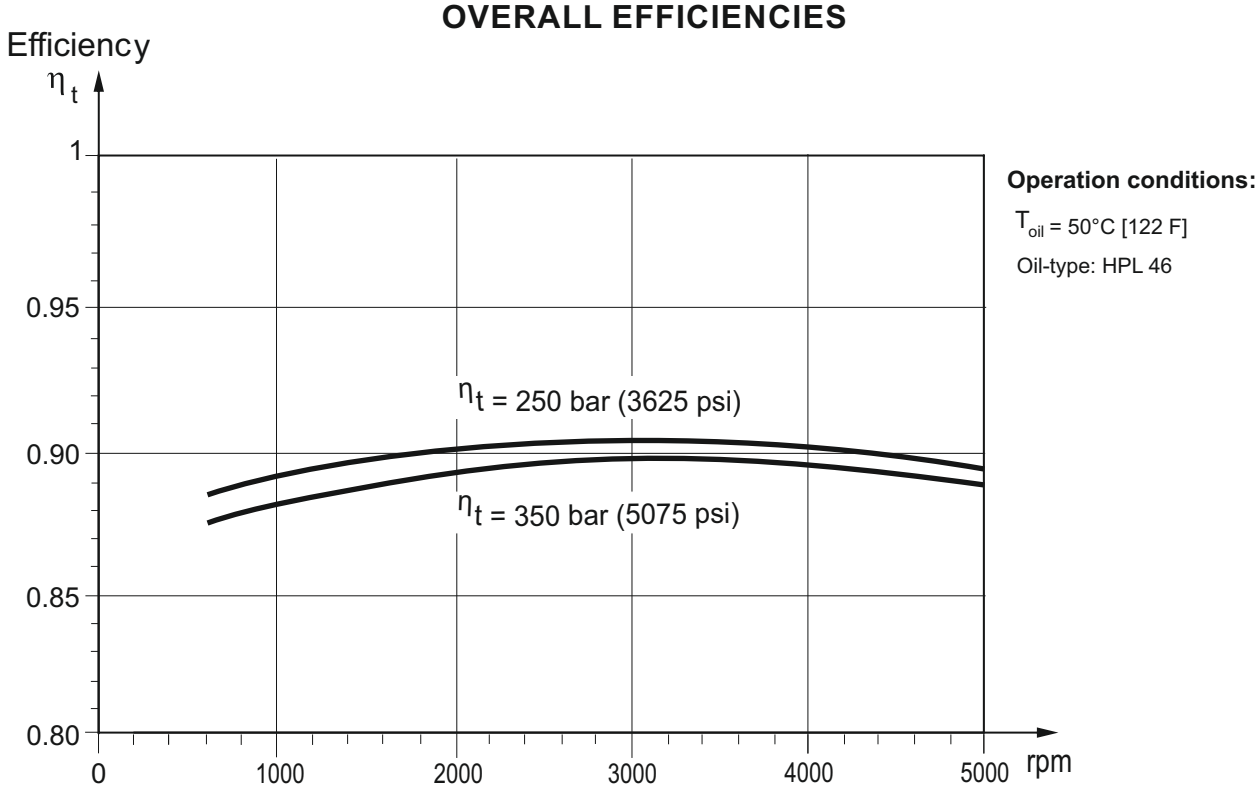

The motor size, pressure, torque, speed of rotation and flow rate required for a specific application can be calculated using the formulas on page 69

Efficiencies for a particular motor may vary from the shown in the diagram depending on the operating conditions.

Overall Dimensions and Ports

Side Ports - **Default** Mounting Flange - Type **SAE-A**

Side ports, port size **default** and **5**

See the port sizes at the bottom of this page

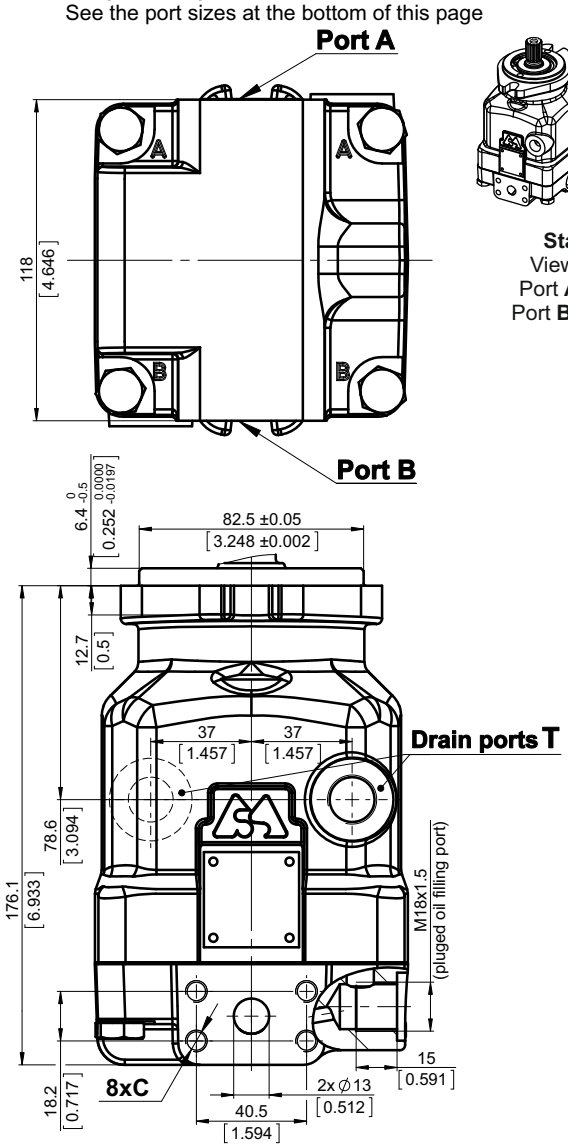

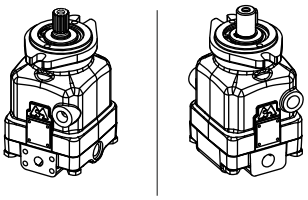

Standard Rotation
Viewed from shaft end
Port **A** Pressurized - **CW**
Port **B** Pressurized - **CCW**
see page 65

Side ports, port size **2, 3, 4** and **6**

See the port sizes at the bottom of this page

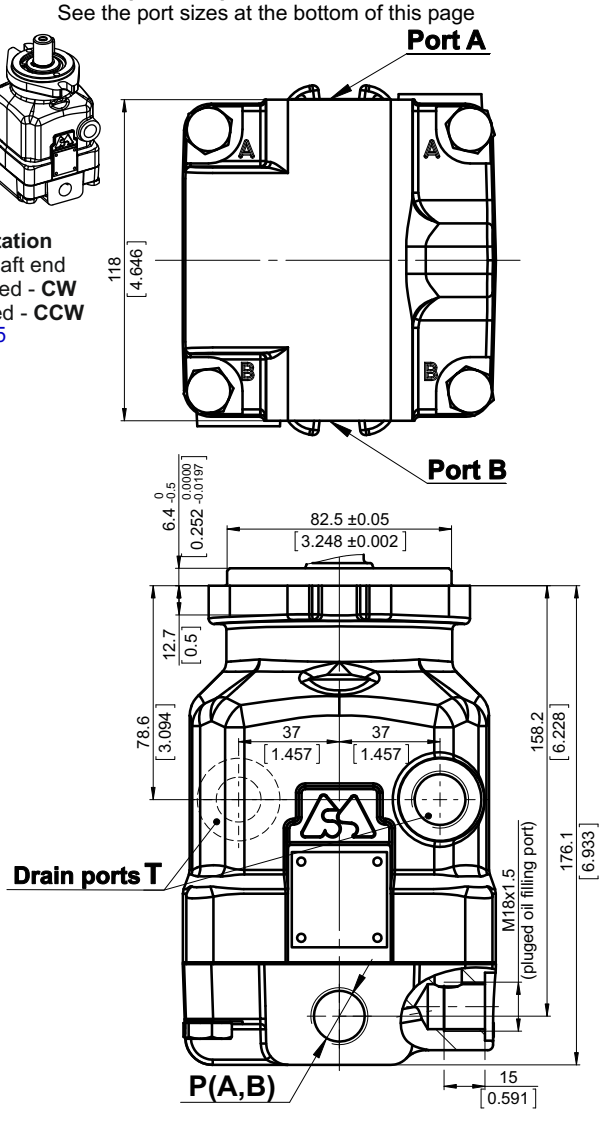

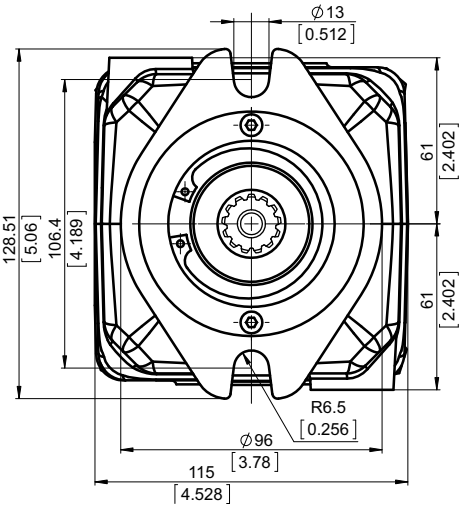

Shaft Mounting
see page 13

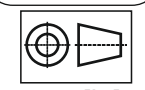

mm [in]

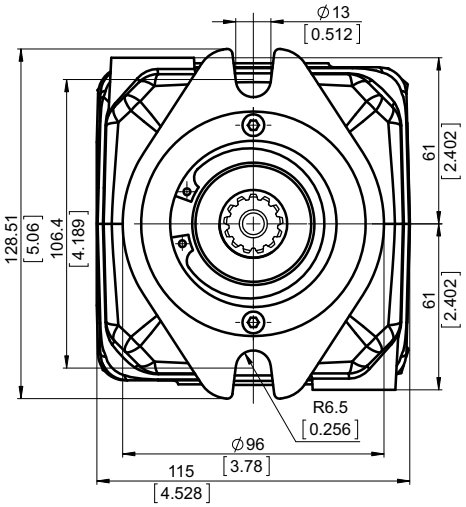

	Port Size		
	default	5	9
$P_{(A,B)}$	2xISO 6162-2 DN13	2xSAE J518 1/2 PSI6000	2xISO 6162-2 DN13
T	M18x1,5	3/4-16 UNF	G1/2
C	M8-6H	5/16-18 UNC-2B	M8-6H

	Port Size			
	2	3	4	6
$P_{(A,B)}$	2xG 1/2	2xM22x1,5	2x ⅞-14UNF	2xG 3/4
T	G 1/2	M18x1,5	¾ -16UNF	G 1/2

Overall Dimensions and Ports

Rear Ports - Type **E** Mounting Flange - Type **SAE-A**

Rear ports **E**, port size **default** and **5**

See the port sizes at the bottom of this page

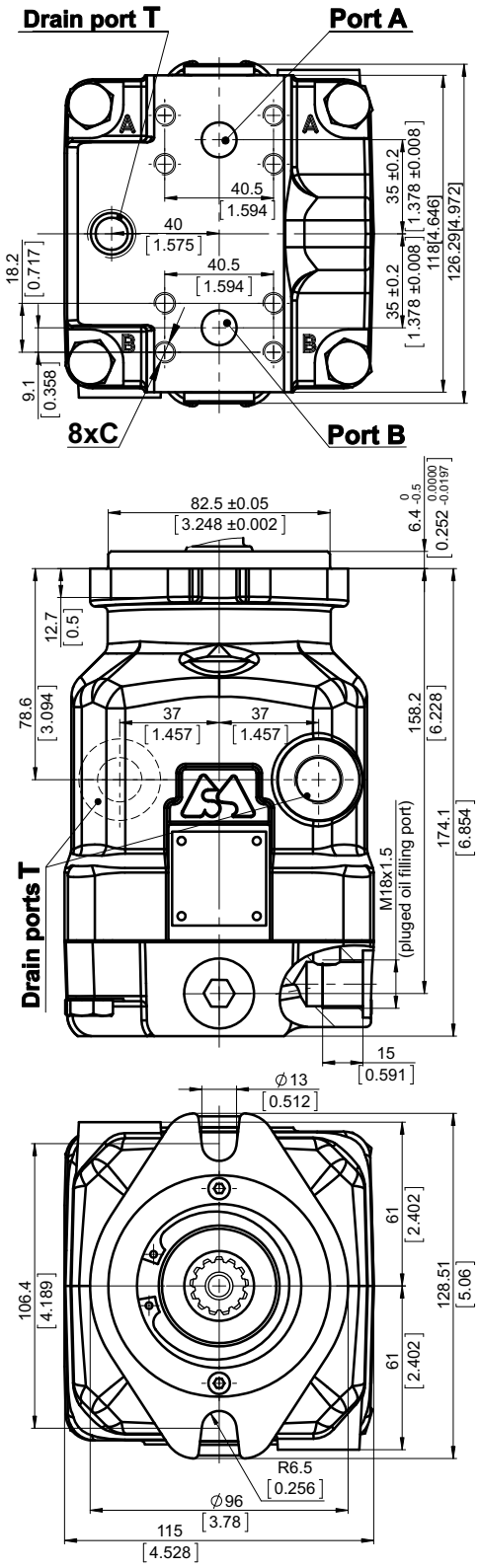

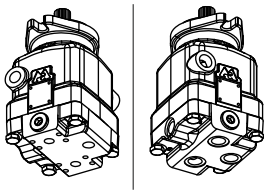

Standard Rotation
Viewed from shaft end
Port **A** Pressurized - **CW**
Port **B** Pressurized - **CCW**
see page 65

Rear ports **E**, port size **2**,**3**,**4** and **6**

See the port sizes at the bottom of this page

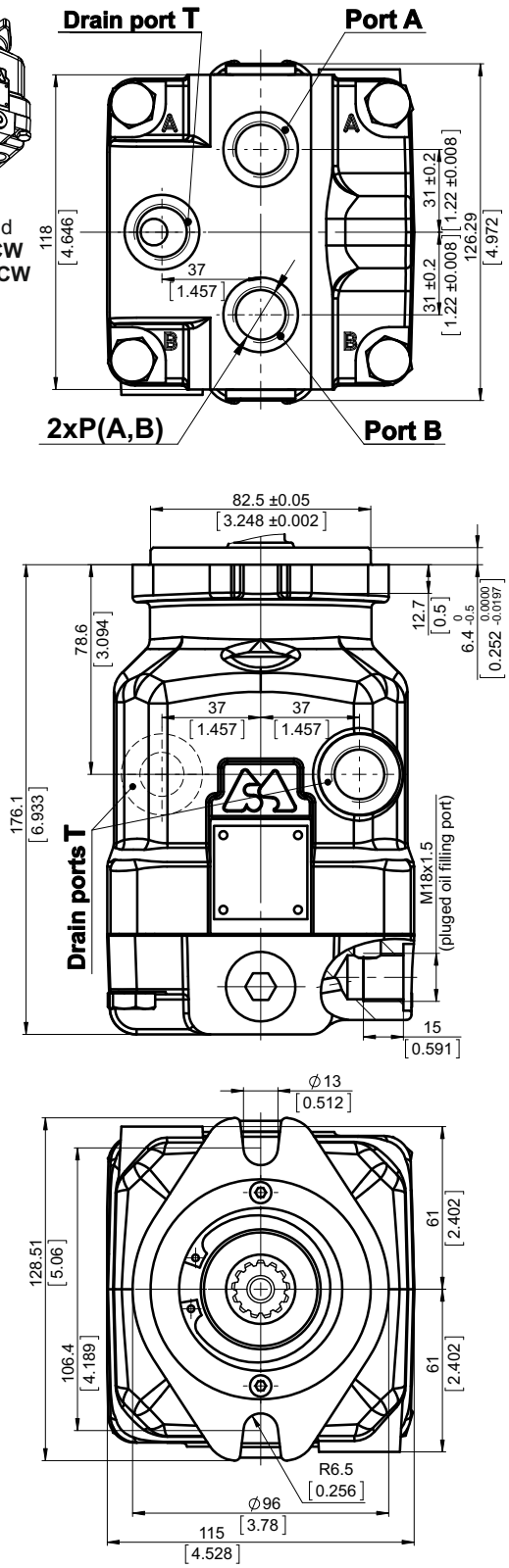

Shaft Mounting
see page 13

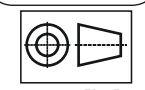

mm [in]

	Port Size		
	default	5	9
$P_{(A,B)}$	2xISO 6162-2 DN13	2xSAE J518 1/2 PSI6000	2xISO 6162-2 DN13
T	M18x1,5	3/4-16 UNF	G1/2
C	M8-6H	5/16-18 UNC-2B	M8-6H

	Port Size			
	2	3	4	6
$P_{(A,B)}$	2xG 1/2	2xM22x1,5	2x ⅞-14UNF	2xG 3/4
T	G 1/2	M18x1,5	¾ -16UNF	G 1/2

Overall Dimensions and Ports

Twin Side Ports - Type **T** Mounting Flange - Type **SAE-A**

Twin side ports **T**, port size **2**,**3**,**4** and **6**

See the port sizes at the bottom of this page

Standard Rotation
Viewed from shaft end
Port **A** Pressurized - **CW**
Port **B** Pressurized - **CCW**
see page 65

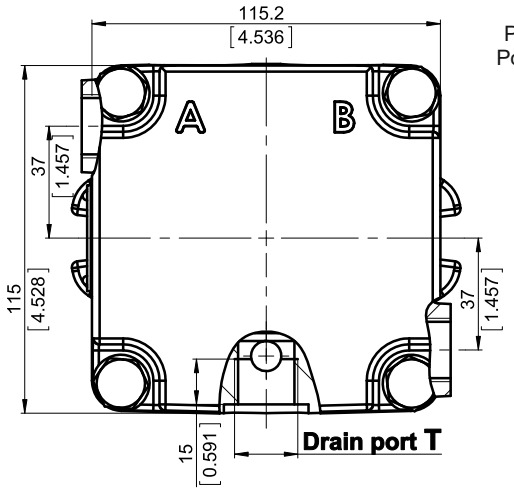

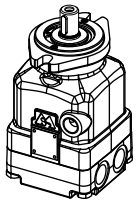

Shaft Mounting
see the next page

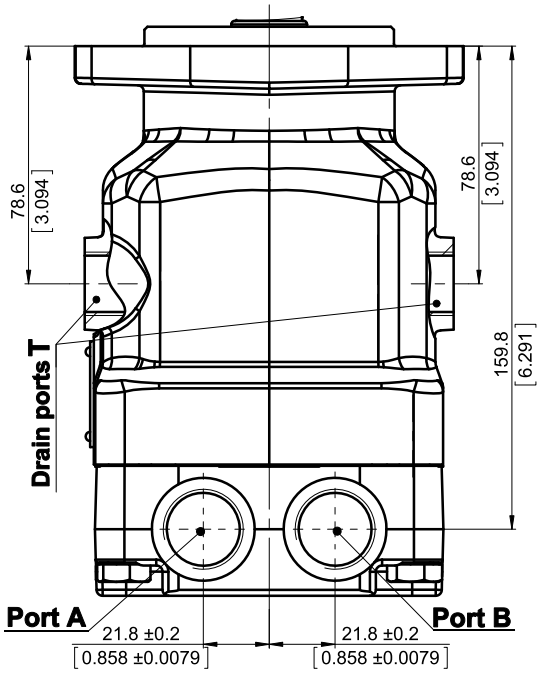

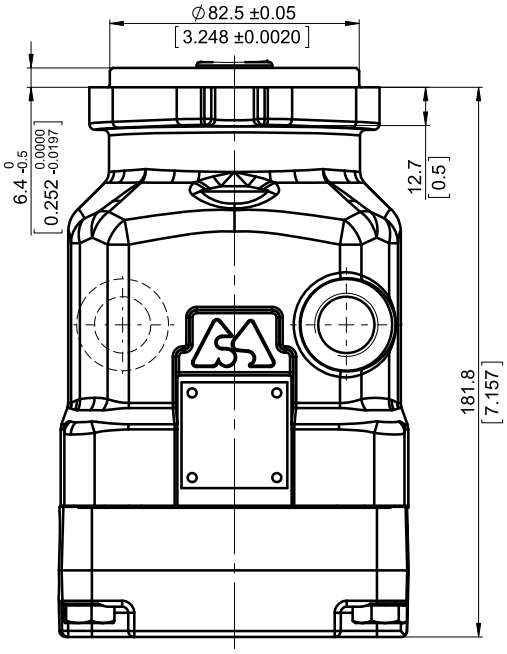

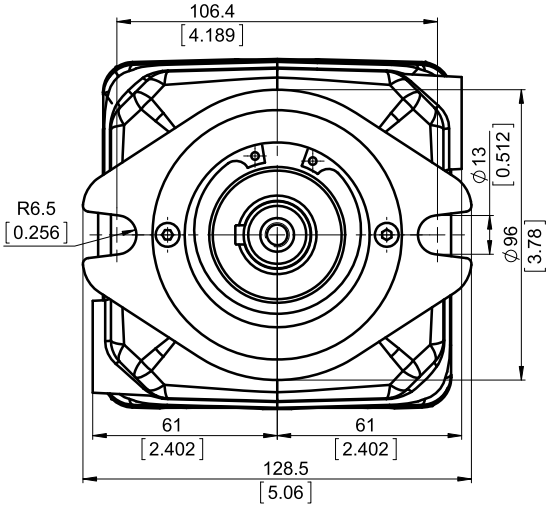

	Port Size			
	2	3	4	6
$P_{(A,B)}$	2xG 1/2	2xM22x1,5	2x 7/8-14UNF	2xG 3/4
T	G 1/2	M18x1,5	3/4 -16UNF	G 1/2

mm [in]

Shafts Mounting

Mounting Flange - Type **SAE-A**

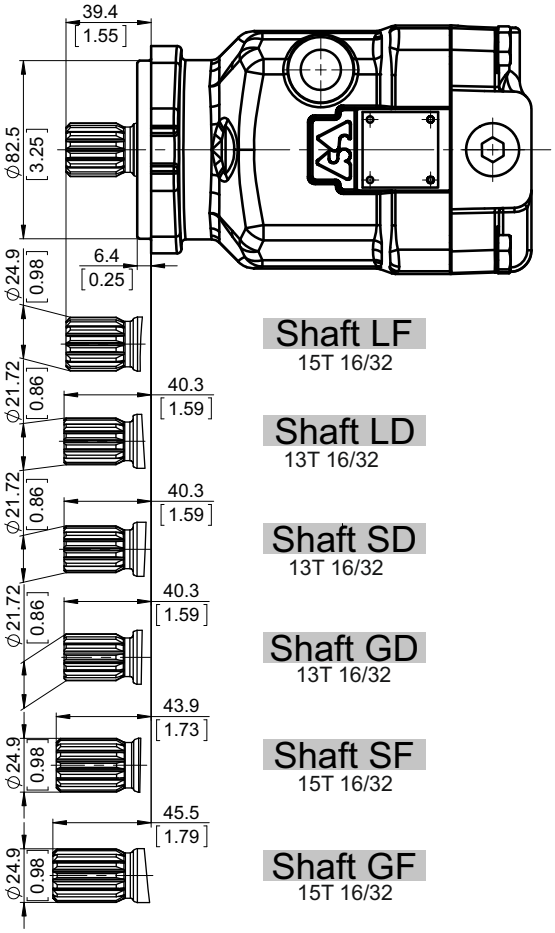

Shaft LF
15T 16/32

Shaft LD
13T 16/32

Shaft SD
13T 16/32

Shaft GD
13T 16/32

Shaft SF
15T 16/32

Shaft GF
15T 16/32

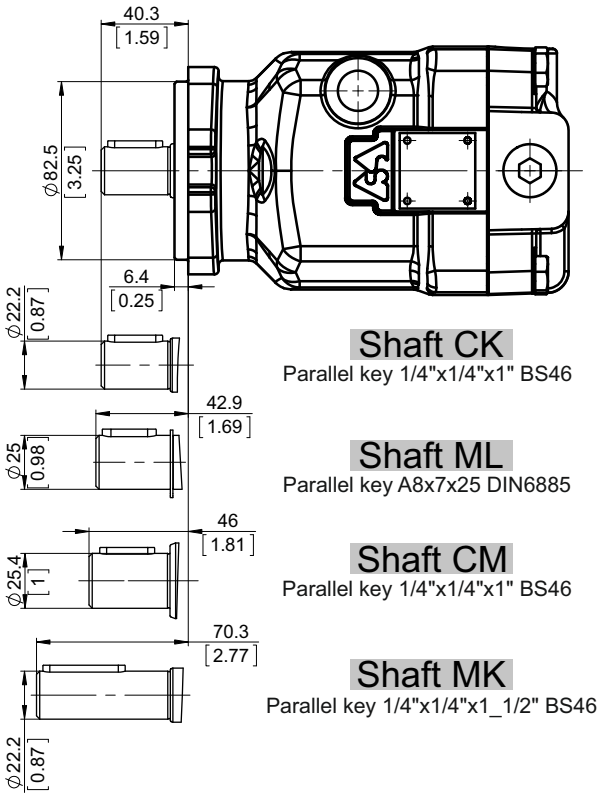

Shaft CK
Parallel key 1/4"x1/4"x1" BS46

Shaft ML
Parallel key A8x7x25 DIN6885

Shaft CM
Parallel key 1/4"x1/4"x1" BS46

Shaft MK
Parallel key 1/4"x1/4"x1_1/2" BS46

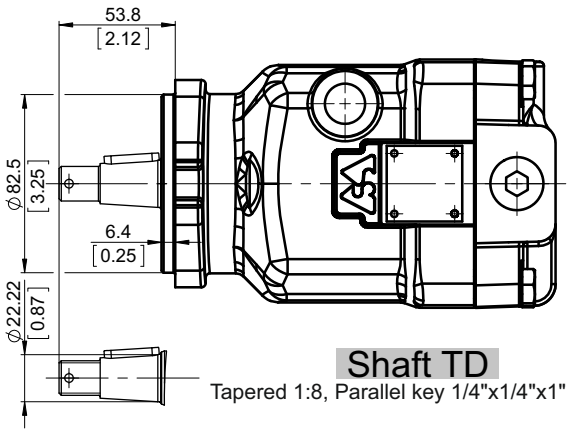

Shaft TD
Tapered 1:8, Parallel key 1/4"x1/4"x1"

Shaft Dimensions
See Page 57÷62

PERMISSIBLE SHAFT LOAD

Permissible shaft load		Standrard bearing	Improved bearing
max Axial	N[lb]	Fa=1300 [292]	Fa=1600 [292]
max Radial	N[lb]	Fr=2200 [495]	Fr=3000 [495]

The calculated max values are based on the optimal direction of the forces Fr, Fa and optimal position of the shaft (see page 65).

For more information, please, feel free to contact us.

mm [in]

Overall Dimensions and Ports

Side Ports - **Default** Mounting Flange - Type **SAE-B**

Side ports, port size **default** and **5**

See the port sizes at the bottom of this page

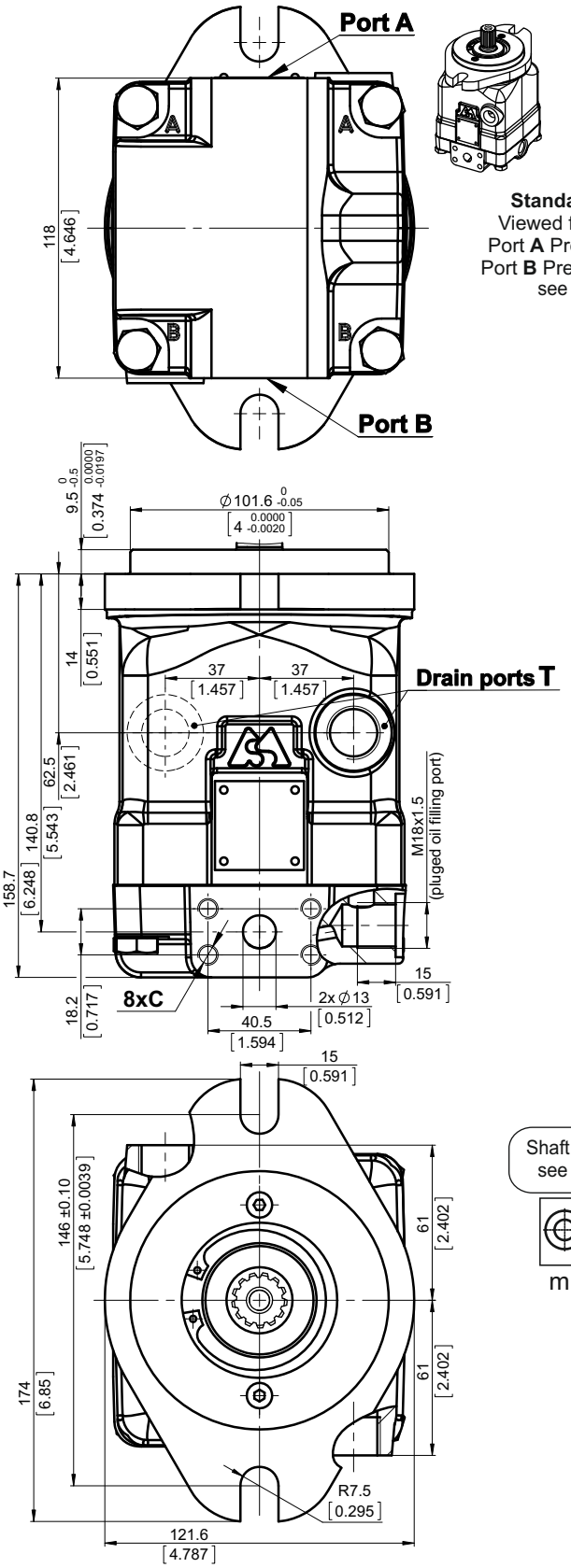

Standard Rotation
Viewed from shaft end
Port **A** Pressurized - **CW**
Port **B** Pressurized - **CCW**
see page 62

Shaft Mounting
see page 17

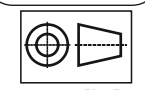

mm [in]

Side ports, port size **2, 3, 4** and **6**

See the port sizes at the bottom of this page

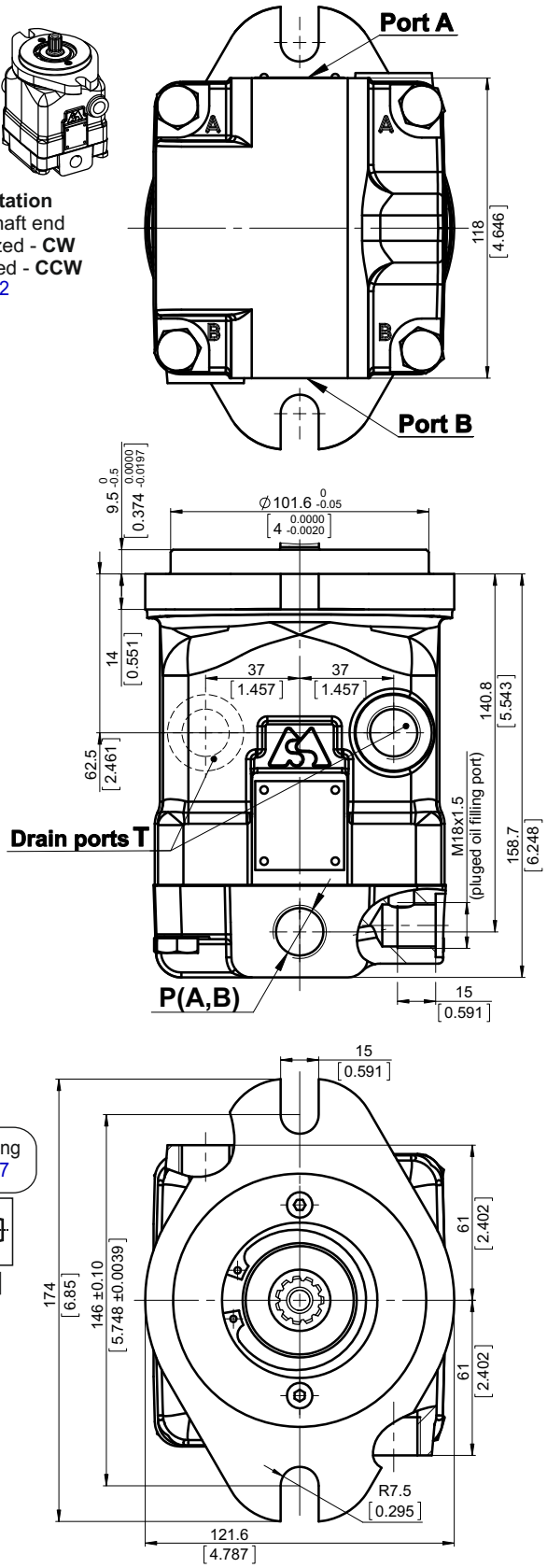

	Port Size		
	default	5	9
$P_{(A,B)}$	2xISO 6162-2 DN13	2xSAE J518 1/2 PSI6000	2xISO 6162-2 DN13
T	M18x1,5	3/4-16 UNF	G1/2
C	M8-6H	5/16-18 UNC-2B	M8-6H

	Port Size			
	2	3	4	6
$P_{(A,B)}$	2xG 1/2	2xM22x1,5	2x ⅞-14UNF	2xG 3/4
T	G 1/2	M18x1,5	¾ -16UNF	G 1/2

Overall Dimensions and Ports

Rear Ports - Type **E** Mounting Flange - Type **SAE-B**

Rear ports **E**, port size **default** and **5**

See the port sizes at the bottom of this page

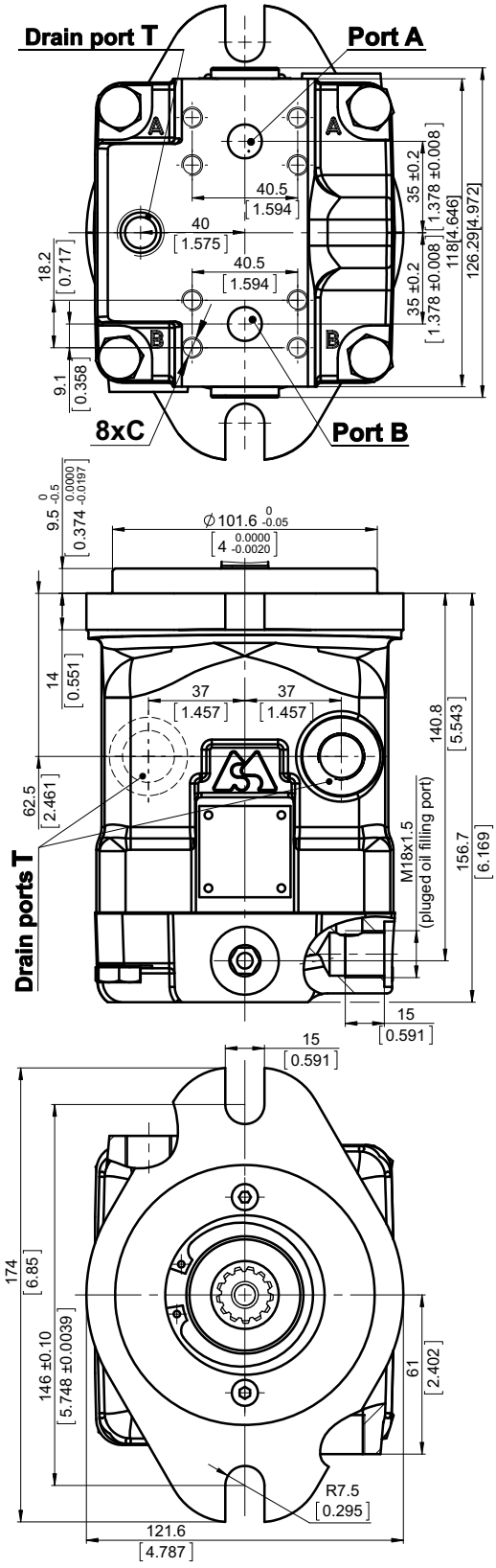

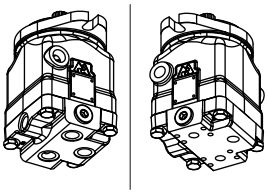

Standard Rotation
Viewed from shaft end
Port **A** Pressurized - **CW**
Port **B** Pressurized - **CCW**
see page 65

Shaft Mounting
see page 17

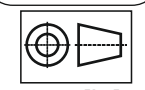

mm [in]

Rear ports **E**, port size **2**,**3**,**4** and **6**

See the port sizes at the bottom of this page

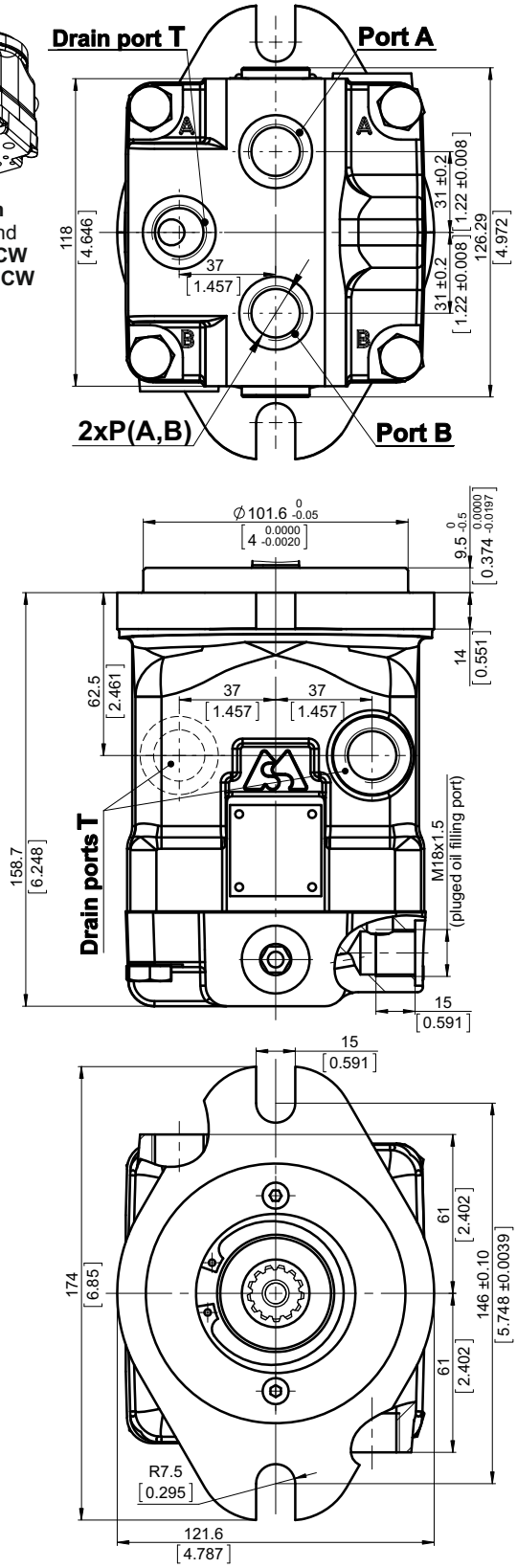

	Port Size		
	default	5	9
$P_{(A,B)}$	2xISO 6162-2 DN13	2xSAE J518 1/2 PSI6000	2xISO 6162-2 DN13
T	M18x1,5	3/4-16 UNF	G1/2
C	M8-6H	5/16-18 UNC-2B	M8-6H

	Port Size			
	2	3	4	6
$P_{(A,B)}$	2xG 1/2	2xM22x1,5	2x ⅞-14UNF	2xG 3/4
T	G 1/2	M18x1,5	¾ -16UNF	G 1/2

Overall Dimensions and Ports

Twin Side Ports - Type **T** Mounting Flange - Type **SAE-B**

Twin side ports **T**, port size **2**,**3**,**4** and **6**

See the port sizes at the bottom of this page

Standard Rotation
Viewed from shaft end
Port **A** Pressurized - **CW**
Port **B** Pressurized - **CCW**
see page 65

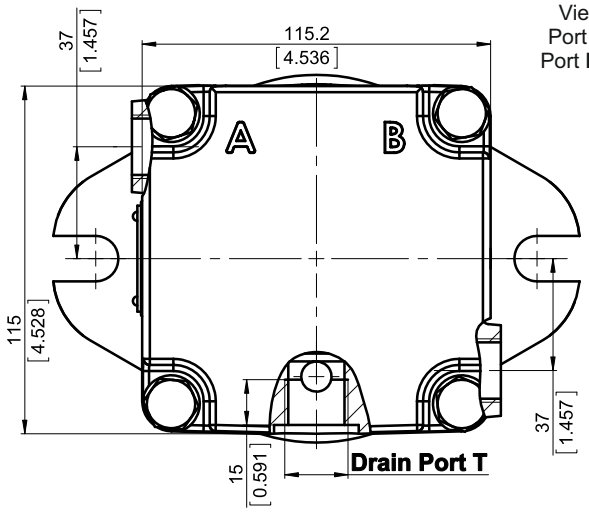

Shaft Mounting
see the next page

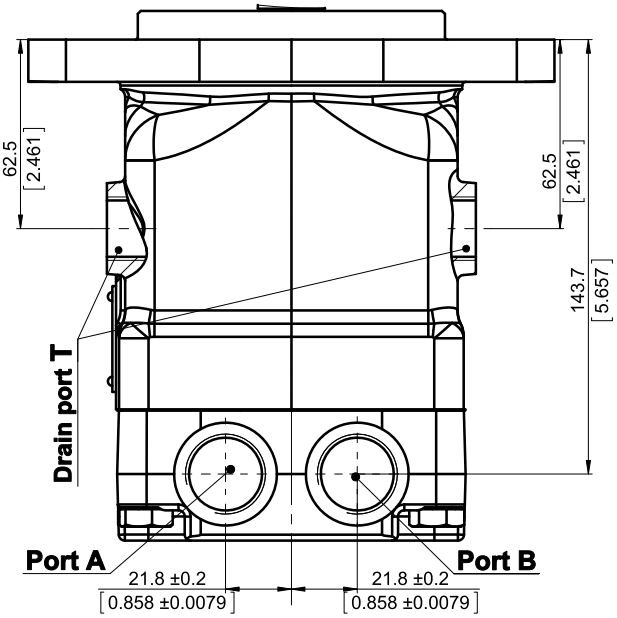

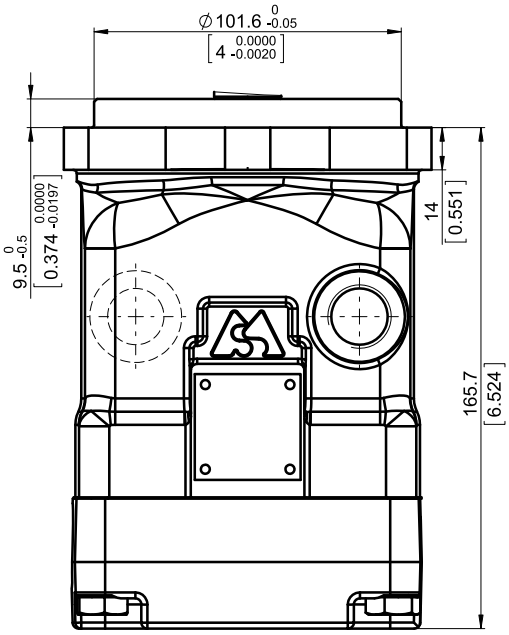

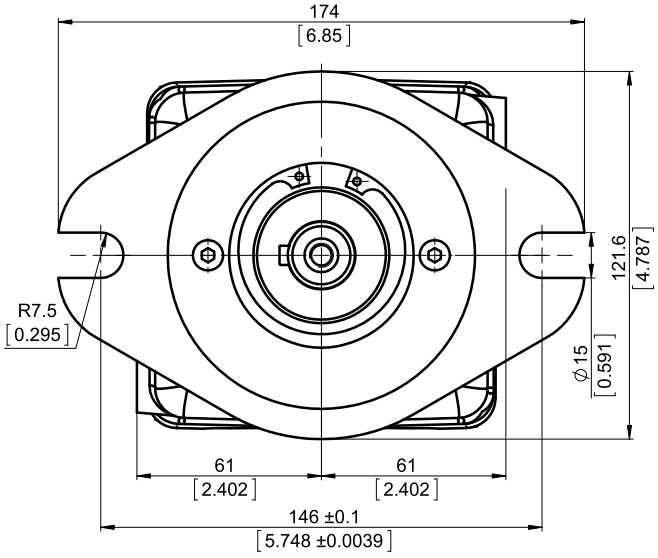

	Port Size			
	2	3	4	6
$P_{(A,B)}$	2xG 1/2	2xM22x1,5	2x ⅞-14UNF	2xG 3/4
T	G 1/2	M18x1,5	¾ -16UNF	G 1/2

mm [in]

Shafts Mounting

Mounting Flange - Type **SAE-B**

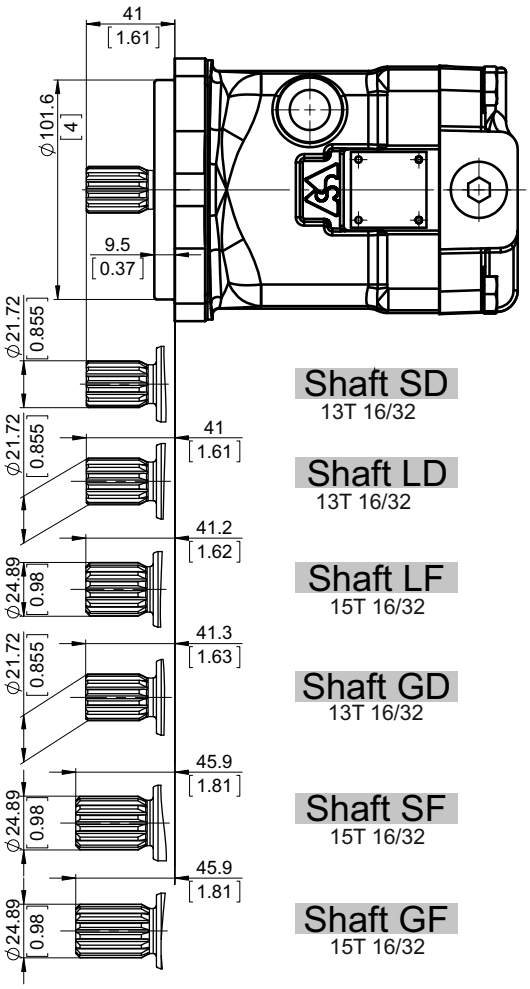

Shaft SD
13T 16/32

Shaft LD
13T 16/32

Shaft LF
15T 16/32

Shaft GD
13T 16/32

Shaft SF
15T 16/32

Shaft GF
15T 16/32

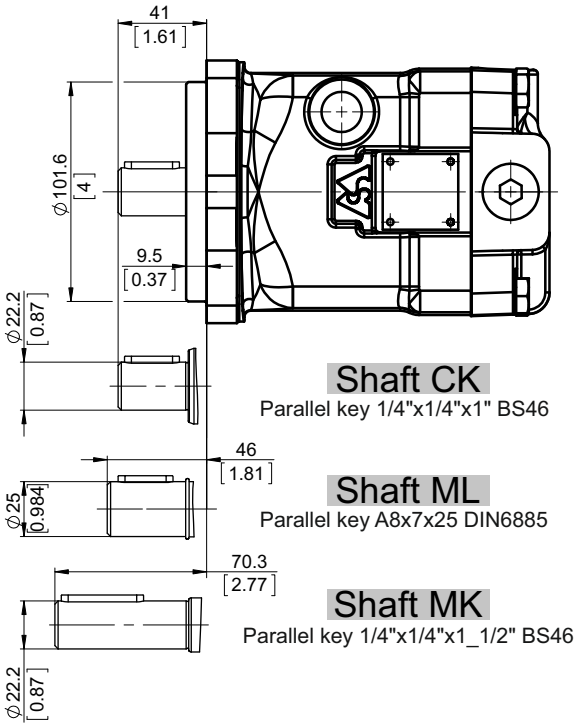

Shaft CK
Parallel key 1/4"x1/4"x1" BS46

Shaft ML
Parallel key A8x7x25 DIN6885

Shaft MK
Parallel key 1/4"x1/4"x1_1/2" BS46

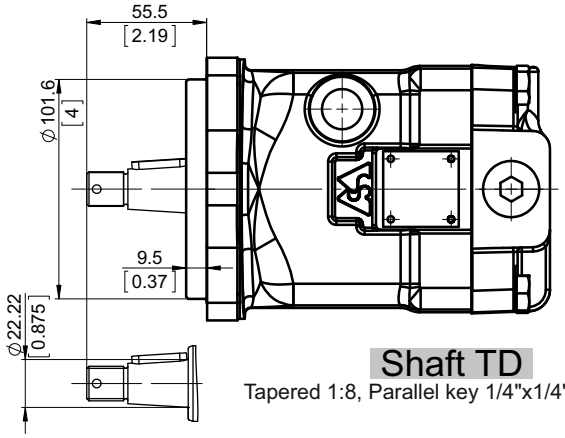

Shaft TD
Tapered 1:8, Parallel key 1/4"x1/4"x1"

Shaft Dimensions
See Page 57÷62

PERMISSIBLE SHAFT LOAD

Permissible shaft load		Standrard bearing
max Axial	N[lb]	Fa=1300 [292]
max Radial	N[lb]	Fr=2200 [495]

The calculated max values are based on the optimal direction of the forces Fr, Fa and optimal position of the shaft (see page 65).

For more information, please, feel free to contact us.

mm [in]

ORDERING CODE

	1	2	3	4	5	6	7	8	9	10	11	12	13	14	14	14
M A P														[		]

Pos.1 - Mounting Flange

- **A** - 2-Bolt flange, SAE A, spigot dia. 82,5[3.25“], BC 106,35 [4.19“], Bolt Dia. 13.5 [0.53“]
- **B** - 2-Bolt flange, SAE B, spigot dia. 101.6[4“], BC 146 [5.748“], Bolt Dia. 14.3 [0.563“]

Pos.2 - Port Type

- omit - Side ports on opposite sides
- **T** - Twin (Two) side ports on one side
- **E** - Rear ports

Pos.3 - Displacement Code

- **22** - 22.15 cm^3/rev. [1.35 in^3/rev.]
- **28** - 28.47 cm^3/rev. [1.74 in^3/rev.]

Pos.4 - Shaft Extensions**

- **SD** - ø21,72 [0.855"] Spline SAE 13T 16/32 DP, M8-6H thread
- **GD** - ø21,72 [0.855"] Spline SAE 13T 16/32 DP, 5/16-18 UNC-2B thread
- **LD** - ø21,72 [0.855"] Spline SAE 13T 16/32 DP, 1/4-20 UNC-2B thread
- **SF** - ø24.9 [0.98"] Spline SAE 15T 16/32, M8-6H thread
- **GF** - ø24,9 [0.98"] Spline SAE 15T 16/32, 3/8-16UNC-2B thread
- **LF** - ø24.9 [0.98"] Spline SAE 15T 16/32 DP, 1/4-20UNC-2B thread
- **CK** - ø22.2 [ø7/8“] Straight, M8-6H thread Parallel key 1/4"x1/4"x1" BS46
- **MK** - ø22.2 [ø7/8“] Straight, M8-6H thread Parallel key 1/4"x1/4"x1_1/2" BS46
- **ML** - ø25 [ø0.984“] Straight, M8-6H thread Parallel key A8x7x25 DIN6885
- **CM** - ø25.4 [ø1“] Straight, M8-6H thread Parallel key 1/4"x1/4"x1" BS46
- **TD** - ø22.22 [7/8"] Tapered 1:8 [125:1000],

Shaft type CM is available only for Pos.5 option N

Pos.5 - Improved radial load

- omit - standard bearing
- **N** - Improved bearing

Option N is available only for Pos.1 option A

Pos.6 - Port Size

- omit - 2xISO 6162-2 DN13, drain port M18x1,5-6H
- **2** - 2xG1/2, drain ports G1/2
- **3** - 2xM22x2, drain ports M22x2-6H
- **4** - 2x7/8-14 UNF Ports, drain ports 3/4-16 UNF
- **5** - 2xSAE 1/2” PSI6000, drain ports 3/4-16 UNF
- **6** - 2xG3/4, drain ports G1/2
- **9** - 2xISO 6162-2 DN13, drain port G1/2

Option omit;5 and 9 are not available for Pos.2 option T

We remain open to meet your special requirements upon request.

Pos.7 - Seal, Corrosion Resistant Seal Surface

- omit - NBR seal type material
- **V** - FKM seal type material

Pos.8 - Integrated Valves

See next page for information about valves

- omit - None
- **HR** - Single anti-cavitation valve
- **AR** - Dual anti-cavitation valve
- **PU** - Purge valve
- **FLU** - Flush valve
- **SAR** - Single anti-cavitation and relief valve
- **DAR** - Dual anti-cavitation and relief valve
- **DARP** - Dual anti-cavitation, relief and purge valve
- **DARF** - Dual anti-cavitation, relief and flush valve

Option DAR, SAR, AR and HR are not available for Pos.2 option E
Option DARF and DARP are available only for Pos.2 option T

Pos.9 - Valve Ports for Single Valves

- omit - None
- **A** - Port A
- **B** - Port B

Pos.10 - Pressure Setting of Integrated Valves

- omit - None
- **x** - For value - see next page

Pos.11 - Flow Setting of Integrated Valves

- omit - None
- **Lx** - For value - see next page

Pos.12 - Special Features*

- omit - None
- **R2S** - Speed Sensor Two Directional (see page 63)
- **R** - Reverse Rotation (see page 65)

Pos.13 - Paint and Coating

- omit - No paint or coating
- **P** - Painted
- **PC** - Corrosion protected paint
- **PS** - Special painted ***
- **PCS** - Special corrosion protected paint***

If a painting option is required, the standard color is black-Alkyd-Styrenated Enamel, Black RAL 9005.
Other colors - on customer’s request.

Pos.14 - Design Series

- omit - Factory specified

*Available on enquiry
**The permissible output torque for shafts must not be exceeded!
***Non painted feeding surface

EXAMPLE

M A P B 2 8 S D 2

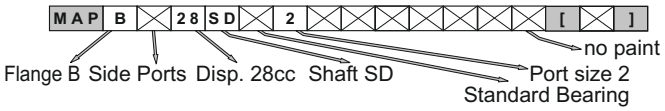

M A P A E 2 2 G D 4 P

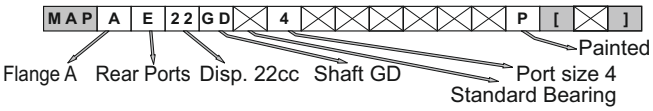

Valve Options

The overall dimensions of the motor with integrated valves could vary compared to the standard motors.

Option **PU**
PURGE VALVE

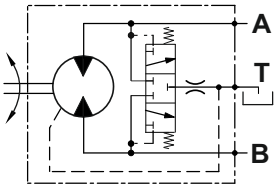

- Mainly used in open loop circuit;
- Used for cooling purpose or oil cleanliness requirements;
- Flow rate by **default (omit) - 3 ÷ 7 l/min**.
- For other options, please see Pos.11 of ordering code, considering the following possible values:

Pos.11	omit	L3.5	L5.5	flow rate

EXAMPLE

M A P B 2 8 S D 2 **P U** purge valve flow rate 5±2 l/min
M A P B 2 8 S D 2 **P U L 3 . 5** purge valve flow rate 3.5±1 l/min
M A P B 2 8 S D 2 **P U L 5 . 5** purge valve flow rate 5.5±1 l/min

Option **FLU**
FLUSH VALVE

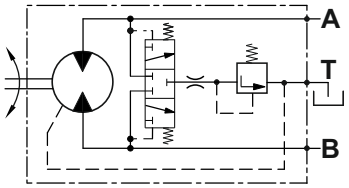

- Mainly used in close loop circuit;
- The valve is a combination between a purge valve and check valve;
- Flow rate by **default (omit) - 3 ÷ 7 l/min and charge (opening) pressure 16 bar** with 20 bar feed pressure for close loop circuit;
- For other options, please see Pos.10 and Pos. 11 of ordering code, considering the following possible values:

Pos.10	omit	10	pressure
Pos.11	omit	L3.5	L5.5	flow rate

EXAMPLE

M A P B 2 8 S D 2 **F L U** flow rate 5±2 l/min, charge pressure 16 bar
M A P B 2 8 S D 2 **F L U 1 0 L 5 . 5** flow rate 5.5±1 l/min, charge pressure 10 bar
M A P B 2 8 S D 2 **F L U L 3 . 5** flow rate 3.5±1 l/min, charge pressure 16 bar

Option **DAR, SARA, SARB**
Combined Anti-Cavitation and Reliev Valve

- Anti-cavitation check valve is used for applications such as Fan drive control;

- Pressure relief valves prevent excessive pressures in the high pressure loop.

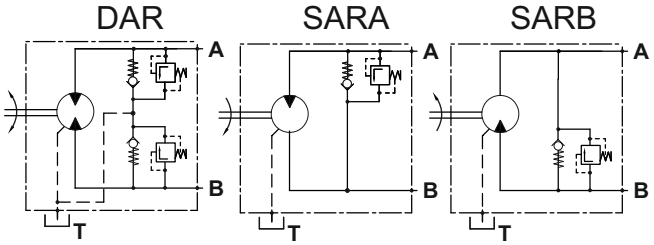

Please, consider the following possible values:

Pos.10	250	300*	350*	pressure

300 and 350 bar options are available only for Pos.2 option T

EXAMPLE

M A P B 2 8 S D 2 **D A R 2 5 0**
Double Anti-Cavitation and Relief Valve, relief valve setting 250 bar

M A P B 2 8 S D 2 **S A R A 2 5 0**
Single Anti-Cavitation and Relief Valve, relief valve setting 250 bar
The valve is placed on port A

M A P B T 2 8 S D 2 **S A R B 3 5 0**
Single Anti-Cavitation and Relief Valve, relief valve setting 350 bar
The valve is placed on port B

Option **AR, HRA, HRB**
Anti-Cavitation Valve

- Anti-cavitation check valve is used for applications such as Fan drive control.

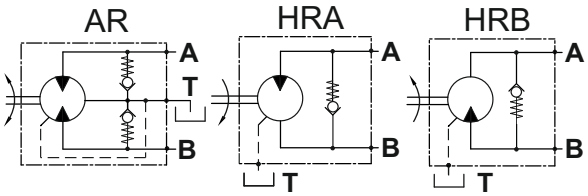

EXAMPLE

M A P B 2 8 S D 2 **A R**
Double Anti-Cavitation Valve

M A P B 2 8 S D 2 **H R A**
Single Anti-Cavitation Valve, the valve is placed on port A

M A P B 2 8 S D 2 **H R B**
Single Anti-Cavitation Valve, the valve is placed on port B

Valve Options

The overall dimensions of the motor with integrated valves could vary compared to the standard motors.

Option **DARP**

Dual Anti-Cavitation, Relief and Purge Valve

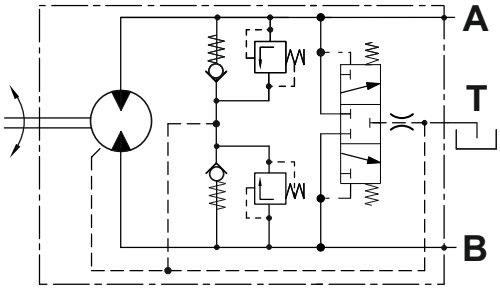

- Mainly used in open loop circuit;
- The valve is a combination between a dual anti-cavitaion, relief and purge valve;
- Purge Valve is used for cooling purpose or cleanliness requirements;
- Anti-Cavitation Check Valve is used for applications such as Fan drive control;
- Pressure relief valves prevent excessive pressures in the high pressure loop;
- Please, consider the following possible values for pressure set of the relief valve:

Pos.10 | **250** | **300*** | **350*** | ⟹ pressure

300 and 350 bar options are available only for Pos.2 option T

- Flow rate of purge valve by **default (omit) - 3 ÷ 7 l/min.** The possible values are as follow:

Pos.11 | **omit** | **L3.5** | **L5.5** | ⟹ flow rate

EXAMPLE

M A P B T 2 8 S D 2 **D A R P 2 5 0**

Double Anti-Cavitation, Relief and Purge Valve,
relief valve setting 250 bar, purge valve flow rate 5±2 l/min

M A P B T 2 8 S D 2 **D A R P 2 5 0 L 3 . 5**

Double Anti-Cavitation, Relief and Purge Valve,
relief valve setting is 250 bar, purge valve flow rate 3.5±1 l/min

M A P B T 2 8 S D 2 **D A R P 3 0 0 L 5 . 5**

Double Anti-Cavitation, Relief and Purge Valve,
relief valve setting 300 bar, purge valve flow rate 5.5±1 l/min

Option **DARF**

Dual Anti-Cavitation, Relief and Flush Valve

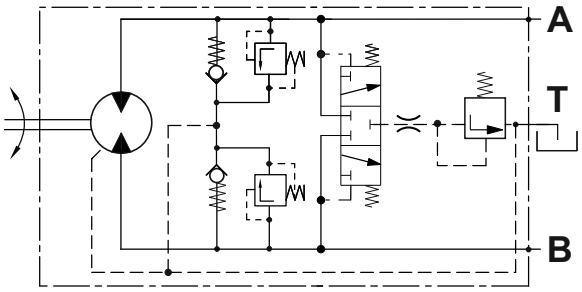

- Mainly used in close loop circuit;
- The valve is a combination between a dual anti-cavitaion, relief and flush valve;
- Flush valve is used for cooling purpose or cleanliness requirements;
- Anti-Cavitation Check valve is used for applications such as Fan drive control;
- Pressure Relief Valves prevent excessive pressures in the high pressure loop;
- Please, consider the following possible values for pressure set of the relief valve:

Pos.10 | **250** | **300*** | **350*** | ⟹ pressure

300 and 350 bar options are available only for Pos.2 option T

- Flow rate of flush valve by **default (omit) - 3 ÷ 7 l/min and charge pressure 16 bar** with 20 bar feed pressure for close loop circuit. The possible values are as follow:

Pos.11 | **omit** | **L3.5** | **L5.5** | ⟹ flow rate

- Other values for charge pressure are possible. Please see Pos.10.
Example: For charge pressure 10 bar the options are as follow:

Pos.9 | 250-**10** | 300-**10** | 350-**10**

Relief valve opening pressure — Flush valve opening pressure (charge pressure)

EXAMPLE

M A P B T 2 8 S D 2 **D A R F 3 0 0**

Double Anti-Cavitation, Relief and Flush Valve, relief valve setting 300 bar
flush valve charge pressure 16 bar, flush valve flow rate 5±2 l/min

M A P B T 2 8 S D 2 **D A R F 3 0 0 - 1 0**

Double Anti-Cavitation, Relief and Flush Valve, relief valve setting 300 bar
flush valve charge pressure 10 bar, flush valve flow rate is 5±2 l/min

M A P B T 2 8 S D 2 **D A R F 2 5 0 L 3 . 5**

Double Anti-Cavitation, Relief and Flush Valve, relief valve setting 250 bar
flush valve charge pressure 16 bar, flush valve flow rate is 3.5±1 l/min

M A P B T 2 8 S D 2 **D A R F 3 0 0 - 1 0 L 5 . 5**

Double Anti-Cavitation, Relief and Flush Valve, relief valve setting 300 bar
flush valve charge pressure 10 bar, flush valve flow rate 5.5±1 l/min